THE USE OF THE EMPIRICAL PROBABILITY GENERATING FUNCTION TO ESTIMATE THE NEYMAN TYPE A DISTRIBUTION PARAMETERS

Harold Ralph Bishop

NAVAL POSTGRADUATE SCHOOL
Monterey, California

THESIS

THE USE OF THE EMPIRICAL PROBABILITY GENERATING FUNCTION TO ESTIMATE THE NEYMAN TYPE A DISTRIBUTION PARAMETERS

by

Harold R. Bishop

September 1979

Thesis Advisor: R. R. Read

Approved for public release;
distribution unlimited

T189618

SECURITY CLASSIFICATION OF THIS PAGE (When Data Entered)

REPORT DOCUMENTATION PAGE

READ INSTRUCTIONS BEFORE COMPLETING FORM

1. REPORT NUMBER

2. GOVT ACCESSION NO.

3. RECIPIENT'S CATALOG NUMBER

4. TITLE (and Subtitle)

The Use of the Empirical Probability Generating Function to Estimate the Neyman Type A Distribution Parameters

5. TYPE OF REPORT & PERIOD COVERED

Master's Thesis; September 1979

6. PERFORMING ORG. REPORT NUMBER

7. AUTHOR(s)

Harold R. Bishop

8. CONTRACT OR GRANT NUMBER(s)

9. PERFORMING ORGANIZATION NAME AND ADDRESS

Naval Postgraduate School
Monterey, California 93940

10. PROGRAM ELEMENT, PROJECT, TASK AREA & WORK UNIT NUMBERS

11. CONTROLLING OFFICE NAME AND ADDRESS

Naval Postgraduate School
Monterey, California 93940

12. REPORT DATE

September 1979

13. NUMBER OF PAGES

86

14. MONITORING AGENCY NAME & ADDRESS(if different from Controlling Office)

Naval Postgraduate School
Monterey, California 93940

15. SECURITY CLASS. (of this report)

Unclassified

15a. DECLASSIFICATION/DOWNGRADING SCHEDULE

16. DISTRIBUTION STATEMENT (of this Report)

Approved for public release; distribution unlimited

17. DISTRIBUTION STATEMENT (of the abstract entered in Block 20, if different from Report)

18. SUPPLEMENTARY NOTES

19. KEY WORDS (Continue on reverse side if necessary and identify by block number)

20. ABSTRACT (Continue on reverse side if necessary and identify by block number)

The Maximum Likelihood estimators for the Neyman Type A distribution parameters are very difficult to compute. In this thesis, the Empirical Probability Generating Function is used to provide estimators that are easier to compute and have asymptotic efficiency at least as high as 97% of that for the Maximum Likelihood estimators over most of the parameter space considered. The estimators found by this method are consistently

DD FORM 1 JAN 73 1473 EDITION OF 1 NOV 65 IS OBSOLETE
(Page 1) S/N 0102-014-6601

SECURITY CLASSIFICATION OF THIS PAGE (When Data Entered)

Approved for public release;
distribution unlimited

THE USE OF THE EMPIRICAL PROBABILITY GENERATING FUNCTION TO ESTIMATE THE NEYMAN TYPE A DISTRIBUTION PARAMETERS

by

Harold Ralph Bishop
Lieutenant, United States Navy
B. A., San Jose State College, 1971

Submitted in partial fulfillment of the
requirements for the degree of

MASTER OF SCIENCE IN OPERATIONS RESEARCH

from the

NAVAL POSTGRADUATE SCHOOL

September 1979

Thesis
B54517
c.1

ABSTRACT

The Maximum Likelihood estimators for the Neyman Type A distribution parameters are very difficult to compute. In this thesis, the Empirical Probability Generating Function is used to provide estimators that are easier to compute and have asymptotic efficiency at least as high as 97% of that for the Maximum Likelihood estimators over most of the parameter space considered. The estimators found by this method are consistently better than the Method of Moments and the Method of Zero Frequency estimators with respect to asymptotic efficiency. The considerations of preference in using one method over another are discussed.

TABLE OF CONTENTS

I. INTRODUCTION 5

II. NEYMAN TYPE A DISTRIBUTION 7

III. EFFICIENCY AND MAXIMUM LIKELIHOOD EQUATIONS . . . 11

IV. ESTIMATING EQUATIONS 14

V. CALCULATING TECHNIQUES 22

A. METHOD OF COMPUTING t* FOR TABLE 1 22

B. METHOD OF SOLVING FOR m_1* AND m_2* 23

C. METHOD OF DETERMINING Q 25

VI. COMPARISON WITH ESTIMATION BY THE METHOD OF MOMENTS 27

VII. NUMERICAL EXAMPLES 31

VIII. TABLES 36

IX. CONCLUSIONS 60

APPENDIX A--COMPUTER PROGRAMS 63

APPENDIX B--RANDOM NUMBERS FROM THE NEYMAN TYPE A DISTRIBUTION 74

LIST OF REFERENCES 84

INITIAL DISTRIBUTION LIST 85

I. INTRODUCTION

Several 'contagious' distributions, including the Neyman Type A distribution, were derived by Neyman [1] in the course of modeling the reproduction behavior of certain types of plants and bacteria. More currently, these models come under the heading of branching processes. Several methods of parameter estimation have been proposed for the Neyman Type A distribution with varying degrees of success. The two most frequently used are the Method of Moments and the Method of Zero Frequency. The performance of an estimation scheme can be measured by the asymptotic efficiency of its estimators as defined by Wilks [2]. This paper proposes a method for estimating the parameters of the Neyman Type A distribution by using the Empirical Probability Generating Function.

For the Neyman Type A distribution, the Method of Moments provides estimates that are quick and easy to compute, although the efficiency of these estimators is not always high. It is well known that Maximum Likelihood estimators are asymptotically efficient, but they are very difficult to compute for the Neyman Type A distribution.

The method of estimation by using the Empirical Probability Generating Function provides estimators with asymptotic efficiency close to that of the Maximum Likelihood estimators over most of the parameter space considered. Extensive tables

are presented along with an algorithm that is relatively easy to use on current programmable calculators.

The estimators found by applying this method have consistently higher asymptotic efficiency than the Method of Moments and the Method of Zero Frequency estimators. However, larger sample sizes may be required to cause the algorithm to converge on a unique pair of estimates.

A brief outline of the report is presented as follows. A derivation of the Neyman Type A distribution with a list of some of its mathematical properties is contained in section II. The equations for the Maximum Likelihood estimators and asymptotic efficiency appear in section III. The mathematical details of using the Empirical Probability Generating Function to provide estimators are found in section IV, along with a pictorial display of asymptotic efficiency for these estimators. An algorithm for computing the estimates of this method is presented in section V. The method of using the Empirical Probability Generating Function is compared to the Method of Moments in Section VI. The algorithm described in section V is illustrated by a numerical example along with computer studies in section VII. Tables for use with the above algorithm are found in section VIII and a summary of the results appears in Section IX.

II. NEYMAN TYPE A DISTRIBUTION

Neyman's Type A distribution can be used to model decay and reproduction processes which fit the assumptions of compound Poisson processes. A derivation of this distribution provides an understanding of its structure, usefulness, and properties. For these reasons it is presented in the following form.

Consider a decay process in which radioactive nuclei decay to produce daughter nuclei according to a Poisson process with rate λ. Also suppose that the number of daughter nuclei produced after each decay are independent random variables having a common Poisson distribution with parameter m_2. Let $N(t)$ = the number of decays in the time interval $(0,t]$.

Y_i = the number of daughters produced from the ith decay.

X = the total number of first generation daughters produced in the time interval $(0,t]$.

Then

$$X = \sum_{i=1}^{N(t)} Y_i .$$

Because $N(t)$ is a Poisson process with rate λ,

$$P\,[N(t) = n] = e^{-\lambda t} \frac{(\lambda t)^n}{n!} \quad \text{for } n = 0,1,\ldots..$$

Conditioning on N(t) is used now to find the probability mass function of the random variable X. For fixed N(t), X is a Poisson random variable with parameter nm_2 when N(t) = n. Thus

$$P\ (X = x \mid N(t) = n) = e^{-nm_2} \frac{(nm_2)^x}{x!} \quad \text{for } x = 1,2,3,\ldots..$$

The event that no daughters are produced in the first generation may be described by two cases, namely

1) $X = 0$ if $N(t) = 0$ or,

2) $X = 0$ if $N(t) \neq 0$.

From case 1) $P(X = 0 \mid N(t) = 0) = 1$ is obvious.

And from case 2) $P(X = 0 \mid N(t) = n \neq 0) = e^{-nm_2}$.

Now, using the total probability theorem,

$$P_o = P(X = 0) = \sum_{n=0}^{\infty} P(X = 0 \mid N(t) = n)\ P(N(t) = n)$$

or

$$P_o = e^{-\lambda t} + \sum_{n=1}^{\infty} e^{-nm_2}\ e^{-\lambda t} \frac{(\lambda t)^n}{n!}$$

$$P_o = e^{-\lambda t(1 - e^{-m_2})}.$$

It is also obvious that for $X = x > 0$, $P(X = x \mid N(t) = 0) = 0$. And by using the same conditioning argument as above it is evident that,

$$P_x = P(X = x) = \sum_{n=1}^{\infty} e^{-nm_2} \frac{(nm_2)^x}{x!} e^{-\lambda t} \frac{(\lambda t)^n}{n!} .$$

These two formulas may be combined into one expression which is given in Shenton [3] as

$$P_x = \frac{e^{-m_1} m_2^{\,x}}{x!} \left[0^x + \frac{\beta 1^x}{1!} + \frac{\beta^2 2^x}{2!} + \frac{\beta^3 3^x}{3!} + \ldots\ldots \right] \qquad (2.1)$$

where

$$m_1 = \lambda t \quad \beta = m_1 e^{-m_2} \quad \text{and} \quad 0^x = \begin{cases} 1 \text{ if } x = 0 \\ 0 \text{ if } x \neq 0 \end{cases} .$$

This probability distribution was originally derived by Neyman and is called the Neyman Type A distribution. Other forms of equation (2.1) may be found in Johnson and Kotz [4].

Some of the properties of this distribution are needed in the further development of this paper and are

1. Probability generating function,

$$E(t^X) = e^{-m_1 \left[1 - e^{m_2 (t-1)} \right]} \qquad (2.2)$$

2. Moment generating function,

$$E(e^{uX}) = e^{-m_1 \left[1 - e^{m_2 (e^u - 1)} \right]} . \qquad (2.3)$$

By using the well-known formula

$$\frac{d^k}{du^k} E(e^{uX}) \Big|_{u = 0} = E(X^k)$$

the following are obtained

3. $E(X) = m_1 m_2$ (2.4)

4. $E(X^2) = m_1 m_2 (1 + m_2 + m_1 m_2)$ (2.5)

5. $E(X^3) = m_1 m_2 (1 + 3m_2 + 3m_1 m_2 + 3m_1 m_2^2 + m_2^2 + m_1^2 m_2^2)$ (2.6)

6. $VAR(X) = m_1 m_2 (1 + m_2)$ (2.7)

III. EFFICIENCY AND MAXIMUM LIKELIHOOD EQUATIONS

A method for estimating the parameters of a distribution should yield estimators with high asymptotic efficiency and it is well known that Maximum Likelihood estimators have asymptotic efficiency equal to 1. However, the Maximum Likelihood equations may be difficult to solve and such is the case for the Neyman Type A distribution. Replacing some of these equations in the Maximum Likelihood system may produce a system of estimating equations that is more readily solved and still produces estimators with high asymptotic efficiency. Estimating equations considered here are those that equate a statistic with its expected value. This paper presents one such system for the Neyman Type A distribution.

It can be shown (see, for example, Read [5]) that the asymptotic efficiency of the estimators of such a substitute system is

$$\mathrm{EFF} = \frac{|M^{-1}|}{|\Lambda|}$$

where $|\Lambda|$ = information determinant of the probability distribution considered and

$$M = \lim_{n\to\infty} \left[nE(\hat{\theta} - \theta)(\hat{\theta} - \theta)^T \right]$$

with θ = vector of distribution parameters

and $\hat{\theta}$ = vector of estimators of θ.

e expression for EFF can be simplified if

vector of estimating equations

1)

A = the matrix $E\left(\frac{\partial h}{\partial \theta}\right)$ and $C = \lim_{n\to\infty} [\ nE(hh^T)\ ]$

le

$$\text{EFF} = \frac{|A|^2}{|A||C|} . \tag{3.1}$$

Maximum Likelihood equations for the Neyman Type A

ution are derived in [3] and the following forms are

n [4]

$$\bar{x} = \hat{m}_1 \hat{m}_2$$

$$\sum_{i=1}^{n} (x_i + 1) \frac{P_{x_i + 1}}{P_{x_i}} = n\bar{x} \tag{3.2}$$

)

= the sample mean

= the sample size.

should be noted that equation 2) is an extremely com-

d function of m_1 and m_2. To compute the efficiency

other set of equations as substitutes for the equa-

n (3.2), it is necessary to compute the information

inant of the Neyman Type A distribution. The informa-

terminant has been derived in [3] and there it is

that

$$= \frac{1}{m_1 m_2^3} [\ (1 + m_2)Q - m_1 m_2^2\ (m_1 + m_1 m_2 + m_2)\ ] \tag{3.3}$$

IV. ESTIMATING EQUATIONS

The Maximum Likelihood equations are quite difficult to solve for the Neyman Type A distribution as seen from the equations in (3.2). Namely, the second equation is the one that produces the complication. Replacing the second equation in (3.2) with a different one will allow for simpler calculations if this new equation is chosen judiciously. However, the idea of maintaining high efficiency should also be considered when making this choice of a substitute. The use of the Empirical Probability Generating Function (hereafter referred to as EPGF) seems to be appropriate in attaining this goal. This was suggested by the successful application of this choice in the case of the Negative Binomial distribution as demonstrated by Caglayan [7]. Since the EPGF contains the independent variable t, the solution of the new system of estimating equations can be "tuned" so as to achieve the estimators of maximum efficiency capable from the new system. Considering the form of the probability generating function for the Neyman Type A distribution, it is easily amendable to programming on current programmable calculators. With this motivation in mind, the first Maximum Likelihood equation in (3.2) and the EPGF equation which follows are considered as a possible alternative to estimating the parameters for the Neyman Type A distribution.

The EPGF is defined as

$$\text{EPGF} = \frac{1}{n} \sum_{i=1}^{n} t^{x_i}$$

where n = the sample size and x_i = the ith sample value. The expected value of the EPGF is the probability generating function of the distribution of the random variable X and is given by equation (2.2). The system of estimating equations considered above is then

1) $\bar{x} = m_1 m_2$ (4.1)

2) $\frac{1}{n} \sum_{i=1}^{n} t^{x_i} = e^{-m_1 [1 - e^{m_2 (t-1)}]}$ (4.2)

The notation m_1* and m_2* is used to denote the estimators of m_1 and m_2 found by solving equations (4.1) and (4.2). To solve these equations the variable t must have a value in the interval [0,1) to insure that the sign of the left-hand side of equation (4.2) is compatible with the right-hand side. The value chosen for t (which will be denoted as t*) is found by maximizing the asymptotic efficiency of the estimators m_1* and m_2*.

To compute the asymptotic efficiency of m_1* and m_2* equation (3.1) is used. To reduce the amount of typing in the following expressions let

$$G(t) = e^{-m_1 [1 - e^{m_2 (t-1)}]} .$$

The vector of equations (h) is given by

$$h_1 = \bar{x} - m_1 m_2$$

$$h_2 = \frac{1}{n} \sum_{i=1}^{n} t^{x_i} - G(t) .$$

The matrix A is

$$E \begin{bmatrix} \frac{\partial h_1}{\partial m_1} & \frac{\partial h_1}{\partial m_2} \\ \frac{\partial h_2}{\partial m_1} & \frac{\partial h_2}{\partial m_2} \end{bmatrix}$$

from which it follows that its elements are

$$A_{11} = -m_2 \tag{4.3}$$

$$A_{12} = -m_1 \tag{4.4}$$

$$A_{21} = \left[1 - e^{m_2(t-1)} \right] G(t) \tag{4.5}$$

$$A_{22} = m_1(1-t)e^{m_2(t-1)} G(t) . \tag{4.6}$$

The matrix C is

$$\lim_{n\to\infty} nE \begin{bmatrix} h_1^{\,2} & h_1 h_2 \\ h_2 h_1 & h_2^{\,2} \end{bmatrix}$$

and it follows that its elements are

$$C_{11} = \lim_{n\to\infty} n\mathrm{VAR}(\bar{x}) = m_1 m_2 (1 + m_2) \tag{4.7}$$

$$C_{12} = \lim_{n\to\infty} n\mathrm{COV}(\bar{x}, \frac{1}{n} \sum_{i=1}^{n} t^{x_i}) = \mathrm{COV}(x_i, t^{x_i})$$

the last step resulting from x_i and x_j being independent when $i \neq j$.

Continuing,

$$C_{12} = E(x_i t^{x_i}) - E(x_i)E(t^{x_i})$$

and using the fact that for well-behaved distributions (including Neyman's Type A)

$$E(x_i t^{x_i}) = tE\left[\frac{d}{dt}(t^{x_i})\right] = tG'(t)$$

then

$$C_{12} = m_1 m_2 G(t) \left[te^{m_2(t-1)} - 1 \right]. \tag{4.8}$$

By symmetry $C_{12} = C_{21}$.

$$C_{22} = \lim_{n\to\infty} n\mathrm{VAR}\left(\frac{1}{n}\sum_{i=1}^{n} t^{x_i}\right) = \mathrm{VAR}(t^{x_i}) \tag{4.9}$$

thus

$$C_{22} = G(t^2) - [G(t)]^2. \tag{4.10}$$

Using equations (4.3) - (4.6)

$$|A| = m_1 G(t) \left[1 + (m_2(t-1) - 1)e^{m_2(t-1)} \right] \tag{4.11}$$

and using equations (4.7) - (4.10) with

$$B = 1 + m_2 + m_1 m_2 (te^{m_2(t-1)} - 1)^2$$

then

$$|C| = m_1 m_2 \left[(1+m_2)G(t^2) - G^2(t)\, B \right]. \tag{4.12}$$

Now substituting (4.11) and (4.12) into (3.1) results in

$$\mathrm{EFF} = \frac{m_1 G^2(t)\left[1 + (m_2 t - m_2 - 1)\, e^{m_2(t-1)} \right]^2}{|A| m_2 \left[(1+m_2)G(t^2) - G^2(t)\, B \right]} \tag{4.13}$$

t^* is the value of t used to solve equations (4.1) and (4.2). It is defined as

$$EFF(t^*) = \max_{0 \leq t < 1} EFF(t).$$

In order to use this definition the values of m_1 and m_2 must be given. t^* and $EFF(t^*)$ have been computed for known m_1 and m_2 and are presented in Table 1. An algorithm for using these tabled values to find the estimates m_1^* and m_2^* is presented in section V.B.

To describe the relationship between t^*, m_1 and m_2, a three-dimensional plot was made (Fig. 1) for m_1 and m_2 in the range .01(.01).09, .1(.1).9, 1(1)9. Fig. 2 is a corresponding plot of $EFF(t^*)$ for the same set of values for m_1 and m_2. Figures 1 and 2 are representations of the values found in Table 1.

For given values of m_1 and m_2, t^* is the value of t which maximizes the efficiency function EFF(t). The values of t^* are not necessarily continuous as m_1 and m_2 are varied. The efficiency function determined by equation (4.13) is bimodal for certain values of m_1 and m_2 and these modes occur near the endpoints of the interval [0,1). The global maximum of EFF(t) on this interval may occur at either mode for different values of m_1 and m_2, which is the cause for the discontinuities of t^* as seen in Fig. 1. The jump in the surface occurs when m_1 is about 3.0 for all values of $m_2 > 2.0$. Further, it is interesting to note that t^* is approximately zero for $m_1 < 1.0$ and all values of m_2, except for a singular point at

$m_1 = .09$ and $m_2 = .01$. EFF(t*) appears to be a continuous function of m_1 and m_2 as shown in Fig. 2 and is very close to 1.0 over much of the range for m_1 and m_2 described above.

The method used for determining t* is discussed in section V.A.

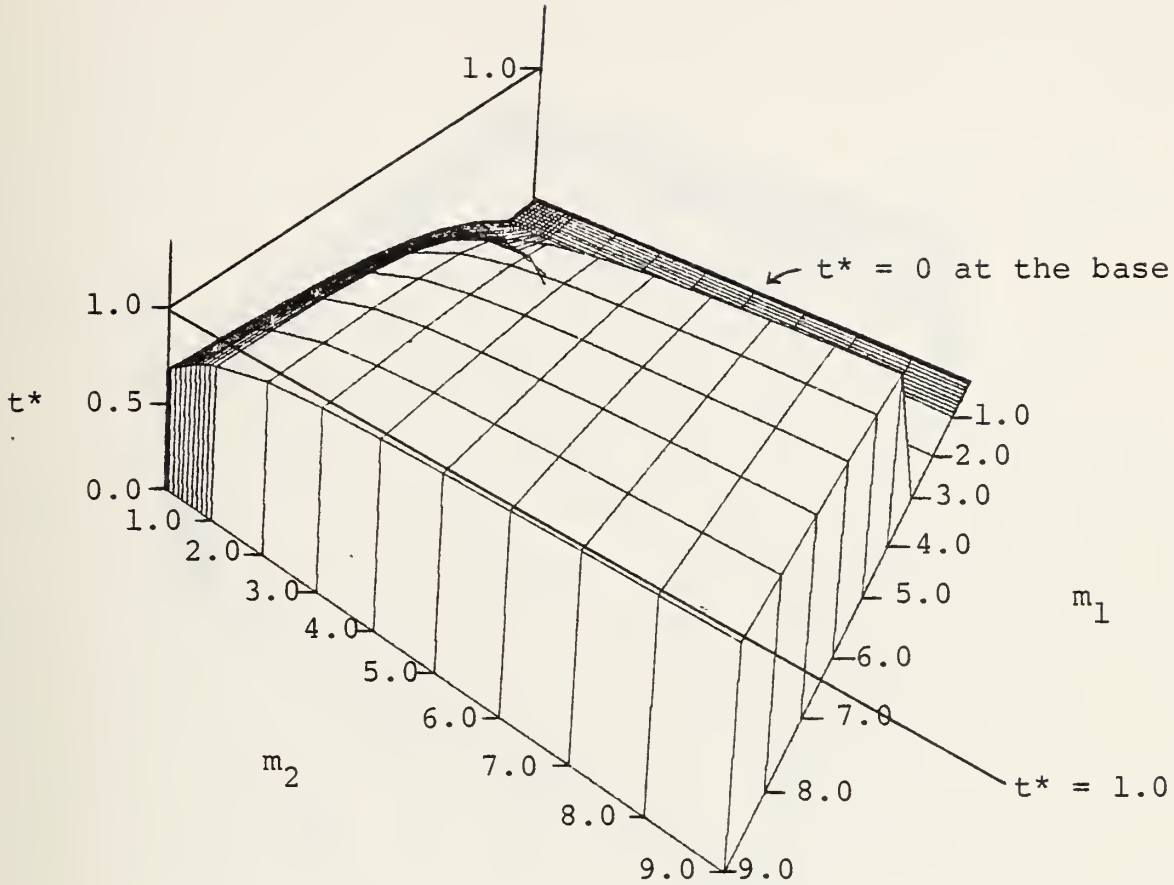

Fig. 1 t* vs. parameters m_1 and m_2

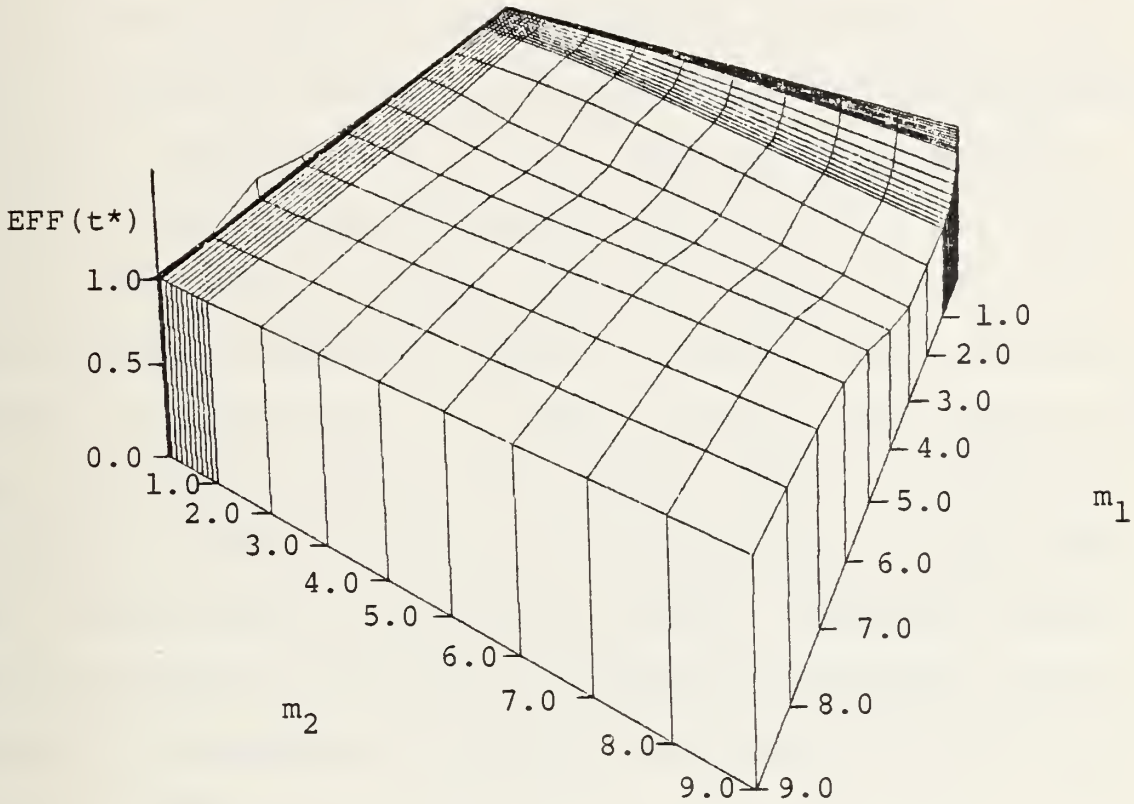

Fig. 2 EFF(t*) vs. parameters m_1 and m_2

V. CALCULATING TECHNIQUES

Estimation of the parameters m_1 and m_2 of the Neyman Type A distribution using the method outlined in section IV involves solving a nonlinear programming problem; specifically, finding a solution (m_1*, m_2*, t*) that maximizes equation (4.13) subject to the constraint equations (4.1) and (4.2). Since this requires a large amount of computing power, an approximating sequential method is proposed that can be performed on a calculator. In order to do this the values of t* must be known for any m_1 and m_2 pair. These t* values are presented in Table 1 along with the associated maximum EFF for a wide range of values of m_1 and m_2. Bivariate linear interpolation as discussed in Abramowitz and Stegun [8] can be used to approximate t* between the values of m_1 and m_2 given in Table 1.

A. METHOD OF COMPUTING t* FOR TABLE 1

Table 1 was prepared by fixing m_1 and m_2 at constant values in the range .01 to 9.0 and then conducting a single variable search on the function EFF (as a function of t only). A Golden section search procedure was employed that terminated at the value of t* equal to the midpoint of the searched interval on which the value of EFF(t) was increasing but did not change by more than 10^{-7} across the interval. Because of the bimodality of EFF(t) on some regions, a search was initiated

from the right end of the interval [0,1) and a separate search started from the left end. The global maximum was then found by comparing the resulting local maximums.

B. METHOD OF SOLVING FOR m_1* AND m_2*

Given a sample of n observations on the random variable X assumed to have an underlying Neyman Type A distribution of which x_i represents the ith sample observation, the algorithm for solving equations (4.1) and (4.2) to find the estimators m_1* and m_2* of the parameters m_1 and m_2 consists of the following steps:

STEP 1 - Compute the Method of Moments estimators from the following equations

$$\begin{aligned} \bar{x} &= \frac{1}{n} \sum_{i=1}^{n} x_i \\ s^2 &= \frac{1}{n-1} \sum_{i=1}^{n} (x_i - \bar{x})^2 \\ \tilde{m}_1 &= \bar{x}/\tilde{m}_2 \\ \tilde{m}_2 &= \frac{s^2}{\bar{x}} - 1 \end{aligned} \tag{5.1}$$

STEP 2 - Find t* in Table 1 corresponding to $\tilde{m}_1$ and $\tilde{m}_2$. Note: If t* = 0. and the sample contains no zero values, set $m_1^* = \tilde{m}_1$ and $m_2^* = \tilde{m}_2$ then STOP.

STEP 3 - Solve the system of equations (4.1) and (4.2) for m_1* and m_2* with t = t* by using a Newton-Raphson procedure. Solving equation (4.1) for m_1 and substituting this into equation (4.2) yields

$$\frac{\bar{x}}{m_2}(g-1) - \ln(\overline{t^x}) = 0 \qquad (5.2)$$

where

$$g = e^{m_2(t-1)} .$$

Applying the Newton-Raphson method on equation (5.2) produces as the (k+1)st iterate of m_2*

$$m_{2_{(k+1)}} = m_k \left[1 + \frac{1 - e^{m_k(t-1)} + m_k \ln(\overline{t^x})\bar{x}^{-1}}{1 + e^{m_k(t-1)} (m_k t - m_k - 1)} \right]$$

where for ease of typing $m_k = m_{2_{(k)}}$ and $m_{2_{(1)}} = \tilde{m}_2$ (the Method of Moments estimator). When termination of the above iteration scheme occurs by the appropriate criteria as set by the user, set $m_2^* = m_{2_{(n)}}$ and compute m_1^* from equation (5.1).

STEP 4 - If $|m_2^* - \tilde{m}_2| < \varepsilon$ STOP, where ε is set by the user. Otherwise return to STEP 2 after replacing $\tilde{m}_2$ with m_2^*.

The convergence of this algorithm depends on the sample size n and how well the Method of Moments estimators approximate the true values of m_1 and m_2. Experience has shown that cycling between estimates can occur when the m_1^* and m_2^* values are close to the points where t* is discontinuous as determined from Fig. 1. This behavior was observed when the above algorithm was applied to data of sample sizes as large as 50. For most cases the estimates obtained by applying the

algorithm converge after two or three iterations. It should be noted from STEP 2 that if $t^* = 0$ and the sample contains no zero values, then the Method of Moments estimators are the default values obtained when using the algorithm.

C. METHOD OF DETERMINING Q

The value of Q as defined in equation (3.4) was computed according to equation (3.5) for the purpose of determining the asymptotic efficiency of the EPGF estimators given in Table 1. The xth power moment of a Poisson distributed random variable (denoted by s_x in equation (3.5)) was computed by finding the maximum term of the series and using this as a scaling factor to keep the partial sums within the limit of an IBM 360/67 computer, which was used for all computations. Actual computations were performed with 16 digit precision using logarithms. Truncation of the series occurred when the first scaled term after the maximum term was found to be less than $e^{-161.1}$. The value of Q was calculated by computing the successive partial sums of q_x until the relative error between the last two was less than 10^{-7} (the last term was not added to the partial sum computed previous to it), i.e., when

$$\frac{q_{m+1}}{\sum_{x=0}^{m} q_x} < 10^{-7}.$$

A discussion of this stopping rule for the particular application described above may be found in Katti and Gurland [9]. As seen in Table 1 there are a few instances where the value

of EFF(t*) was computed as a value greater than 1.0, which is impossible. It is felt by this author that in these occurrences the value of Q was not computed accurately enough. The reason for this is that when m_1 or m_2 was large over 300 terms were required in the partial sum of Q in order to reach the stopping rule criterion given above. However, since the size and frequency of these inconsistencies were small, it is felt that the other results presented in Table 1 are not compromised. This is justified by noting the continuous behavior of EFF(t) as given by equation (4.13) and observing the few values of EFF(t*) > 1.0 in Fig. 2. It is not known why these occurrences did not happen at the extreme values of $m_1 = 9.0$ and $m_2 = .01$. As shown in Fig. 2, they appear to be isolated points of irregularity in the computation of EFF(t).

VI. COMPARISON WITH ESTIMATION BY THE METHOD OF MOMENTS

To determine the utility of the EPGF method of estimation for the Neyman Type A distribution, a comparison with Method of Moments estimation was made. This comparison was performed by computing the ratio of the asymptotic efficiencies of the two schemes. The estimators of m_1 and m_2 by the Method of Moments are found by solving the equations of (5.2) and is actually done in STEP 1 of the sequential algorithm presented in section V.B. The EPGF method is an attempt to improve on the Method of Moments estimation of m_1 and m_2. The amount of improvement is determined by the increase in asymptotic efficiency gained by applying the EPGF method relative to that of the Method of Moments. In order to find this increase, the asymptotic efficiency of the Method of Moments must be found for the Neyman Type A distribution. Using equation (3.1), this was done and is shown below.

The determinants of A and C for the Method of Moments are determined in a manner similar to section IV. By using the equations in (5.2) the following results can be obtained:

$$A_{11} = -m_2$$

$$A_{12} = -m_1$$

$$A_{21} = -m_2 - m_2^2$$

$$A_{22} = -m_1 - 2m_1m_2$$

thus

$$|A| = m_1 m_2^2. \tag{6.1}$$

Also

$$C_{11} = VAR(X_i) = m_1 m_2 (1 + m_2)$$

$$C_{12} = E(X_i^3) - 3E(X_i^2)E(X_j) + 2\ [\ E(X_i)\ ]^3$$

$$C_{12} = m_1 m_2 (1 + 3m_2 + m_2^2)$$

and

$$C_{21} = C_{12}.$$

From formulas derived in [5],

$$C_{22} = E(X_i - \overline{X})^4 - [\ VAR(X_i)\ ]^2$$

$$C_{22} = m_1 m_2\ [\ 2m_1 m_2 (1 + m_2)^2 + (1 + 7m_2 + 6m_2^2 + m_2^3)\ ]$$

so that

$$|C| = m_1^2 m_2^2\ [\ 2m_1 m_2 (1 + m_2)^3 + 2m_2 + 2m_2^2 + m_2^3\ ]. \tag{6.2}$$

Substituting equations (6.1) and (6.2) into equation (3.1) yields

$$EFF_{mm} = \frac{m_2^2}{|A|\ [\ 2m_1 m_2 (1 + m_2)^3 + 2m_2 + 2m_2^2 + m_2^3\ ]} \tag{6.3}$$

where EFF_{mm} represents asymptotic efficiency of the Method of Moments estimators $\tilde{m}_1$ and $\tilde{m}_2$. The ratio EFF/EFF_{mm} formed from equations (4.13) and (6.3) represents the relative merit of the EPGF to Method of Moments estimation.

Values of t^* and EFF/EFF_{mm} are tabulated in Table 2 for the same range as covered by Table 1. This comparison of the two methods is most readily observed in Fig. 3, which is a three-dimensional representation of Table 2. The EPGF method is better than the Method of Moments in producing estimators of high asymptotic efficiency for the range of parameter values covered in Table 2. This is clearly demonstrated by Fig. 3. The EPGF method reduces to the method of estimation by zero frequency when $t^* = 0$. In this case the contours of Fig. 3 can be found in [4] and [9].

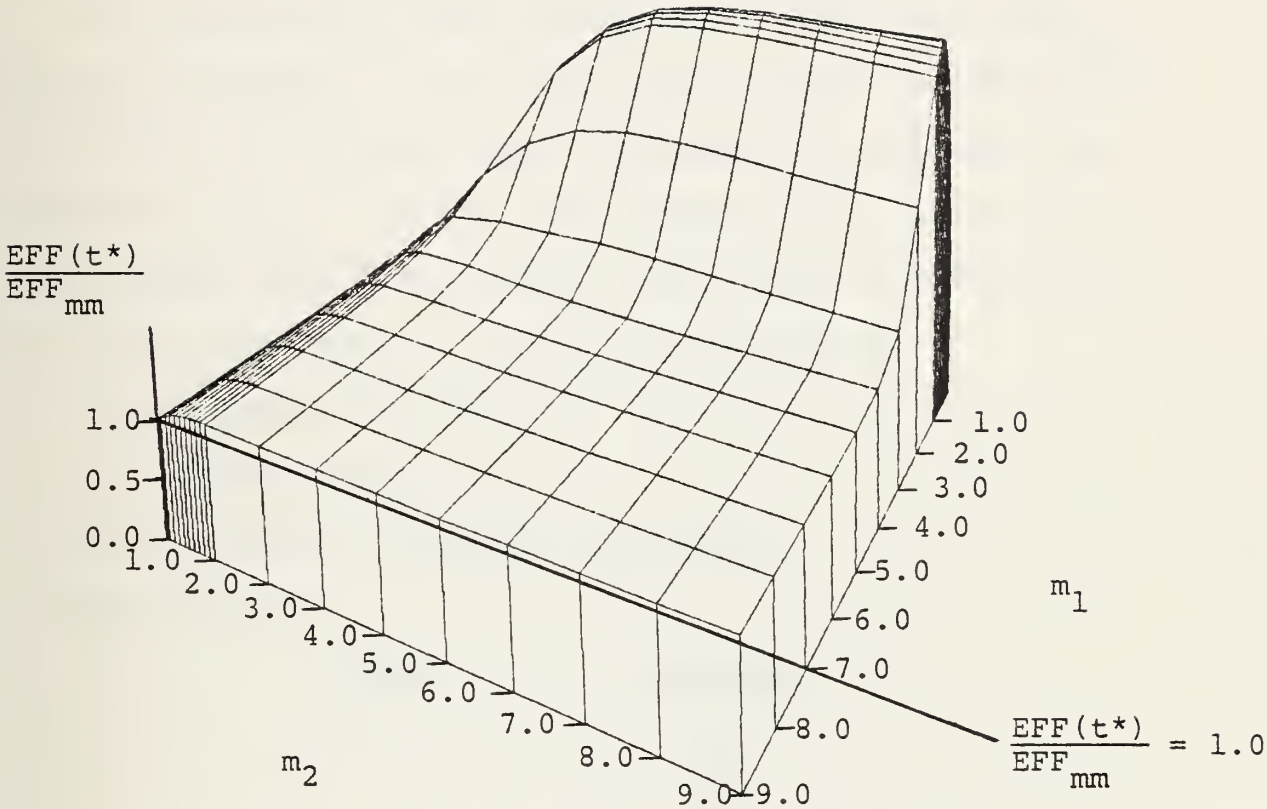

Fig. 3 Efficiency of the EPGF method relative to the Method of Moments vs. the parameters m_1 and m_2

VII. NUMERICAL EXAMPLES

EXAMPLE 1

To illustrate the EPGF method and in particular the algorithm of section V.B, the data of insurance claims caused by accident or sickness cited by Shenton [3] are used and reproduced below. The data are assumed to be observations from a Neyman Type A distribution and three methods of estimating the parameters m_1 and m_2 are considered;

1) the Method of Moments,

2) the EPGF method, and

3) the Method of Maximum Likelihood.

The data are:

Value	Frequency
0	187
1	185
2	200
3	164
4	107
5	68
6	49
7	39
8	21
9	12
10	11
11	2
12	5
13	2
14	3
15	1

sample size = 1056

sample mean = 2.8059

sample variance = 6.4106.

When the EPGF algorithm of section V.B is applied to this data, the following results are obtained:

a) from STEP 1 the Method of Moments estimators are computed to be

$$\tilde{m}_1 = 2.184 \text{ and } \tilde{m}_2 = 1.285$$

b) from STEP 2 the t* value corresponding to $\tilde{m}_1$ and $\tilde{m}_2$ is found by bivariate linear interpolation in Table 1 as follows;

for $m_1 = 2.0$ and $m_2 = 1.285$ linear interpolation gives $t^* = .0748$,

for $m_1 = 3.0$ and $m_2 = 1.285$ linear interpolation gives $t^* = .3774$, and

for $m_1 = 2.184$ and $m_2 = 1.285$ linear interpolation gives $t^* = .1305$

c) from STEP 3 the solution of (5.2) yields

$$m_1^* = 2.638 \text{ and } m_2^* = 1.064$$

where termination of the Newton-Raphson method was set for an absolute error of .0001

d) from STEP 4, where $\varepsilon = .01$, a second application of the algorithm is required and the above m_1^* and m_2^* is used as the new starting point in STEP 1. This second iteration then yields

$$t^* = .2736,\ m_1^* = 2.609, \text{ and } m_2^* = 1.076.$$

Since the termination criteria of STEP 4 is not met a third iteration is performed resulting in the following

$$t^* = .2653,\ m_1^* = 2.611, \text{ and } m_2^* = 1.074$$

with the termination criteria being satisfied.

The computation of Maximum Likelihood estimators for the Neyman Type A distribution is very complicated and only approximate Maximum Likelihood estimates for the above data are given in [3]. To get an idea of the computational effort involved, these estimators are only the first iteration results and required several hours on a desk calculator in 1949.

Maximum Likelihood estimators for the above data were found using a TI-59 programmable calculator and the method presented in [6]. The range of observed values was small enough so that data storage was not exceeded on the calculator. The following results were obtained in approximately thirty minutes of computing time,

Iteration	$\hat{m}_1$	$\hat{m}_2$
1	2.475	1.134
2	2.515	1.116
3	2.516	1.115
4	2.516	1.115.

In comparison, the computing time used to perform the EPGF method was approximately five minutes and the data storage requirement consisted of only keeping eight numbers, which were not influenced by the data values.

EXAMPLE 2

Computer simulation was used to generate eighty-one data sets of random numbers from the Neyman Type A distribution. Computer program 4 in Appendix A was written to simulate the model presented in section II and the data sets produced are

given in Appendix B. This program uses a random number generator that provides random deviates from a Poisson distribution and is a local subroutine. For each data set produced, the sample size was fifty and the range of values used for m_1 and m_2 was 1(1)9.

The EPGF estimates for each data set were found by applying the algorithm presented in section V.B. The t* value required in STEP 2 was computed by actually maximizing the efficiency equation (4.13) with the estimated values of m_1 and m_2. The results of these computations are found in Table 3. The termination criteria of STEP 4 was set at $\varepsilon = .0001$, so that more iterations were required than would normally be expected.

In only two of the eighty-one cases considered, no improvement was achieved over the Method of Moments estimators. These two occurrences are noted in Table 3. For the case $m_1 = 4.0$ and $m_2 = 7.0$, the special termination of STEP 2 of the algorithm was invoked; i.e., t* = 0 and the sample contained no zero values. For the case $m_1 = 5.0$ and $m_2 = 6.0$, cycling between the following estimate values occurred,

t^*	m_1^*	m_2^*
.0000	3.2191	9.6798
.9310	2.9465	10.5754.

The successive estimate pairs m_1^* and m_2^* produce values of t* which are on either side of the discontinuous ridge seen in Fig. 1 of section IV. As previously discussed, the efficiency function is bimodal in this region and causes the

above behavior. Since the asymptotic efficiency is high in this region, a larger sample size producing better initial estimates should resolve the inconsistency which results when cycling occurs.

VIII. TABLES

Tables 1, 2 and 3 mentioned in the previous sections are contained on the following pages. Table 1 presents the optimal t and efficiency values found for the range of m_1 and m_2 from .01 - .09 (increments of .01), .1 - .9 (increments of .1), and 1.0 - 9.0 (increments of 1.0). Table 2 presents the optimal t and efficiency (relative to the efficiency of the Method of Moments) values found for the same range as used in Table 1. Table 3 presents the results of applying the algorithm of section V.B to the data sets of Appendix B.

TABLE 1: OPTIMAL T AND EFFICIENCY VALUES

M1 VALUES	M2 VALUES								
	0.0100	0.0200	0.0300	0.0400	0.0500	0.0600	0.0700	0.0800	0.0900
0.01	0.0024	0.0009	0.0009	0.0006	0.0006	0.0003	0.0003	0.0003	0.0002
	1.0000	1.0000	1.0000	1.0000	1.0000	1.0000	1.0000	1.0000	1.0000
0.02	0.0015	0.0006	0.0003	0.0003	0.0002	0.0002	0.0002	0.0001	0.0001
	1.0000	1.0000	1.0000	1.0000	1.0000	1.0000	1.0000	1.0000	1.0000
0.03	0.0009	0.0003	0.0003	0.0002	0.0002	0.0001	0.0001	0.0001	0.0001
	1.0000	1.0000	1.0000	1.0000	1.0000	1.0000	1.0000	1.0000	1.0000
0.04	0.0006	0.0003	0.0002	0.0001	0.0001	0.0001	0.0001	0.0001	0.0001
	1.0000	1.0000	1.0000	1.0000	1.0000	1.0000	1.0000	1.0000	1.0000
0.05	0.0006	0.0003	0.0002	0.0001	0.0001	0.0001	0.0001	0.0001	0.0000
	1.0000	1.0000	1.0000	1.0000	1.0000	1.0000	1.0000	0.9999	0.9999
0.06	0.0006	0.0002	0.0001	0.0001	0.0001	0.0001	0.0001	0.0000	0.0000
	1.0000	1.0000	1.0000	1.0000	1.0000	0.9999	0.9999	0.9999	0.9999
0.07	0.0003	0.0002	0.0001	0.0001	0.0001	0.0001	0.0000	0.0000	0.0000
	1.0000	1.0000	1.0000	1.0000	0.9999	0.9999	0.9999	0.9999	0.9999
0.08	0.0003	0.0002	0.0001	0.0001	0.0001	0.0000	0.0000	0.0000	0.0000
	1.0000	1.0000	1.0000	1.0000	0.9999	0.9999	0.9999	0.9999	0.9999
0.09	0.9953	0.0001	0.0001	0.0001	0.0001	0.0000	0.0000	0.0000	0.0000
	1.0131	1.0000	1.0000	0.9999	0.9999	0.9999	0.9999	0.9999	0.9998

FOR EACH ENTRY IN THE TABLE:

T* = TOP VALUE OF EACH PAIR

EFF = BOTTOM VALUE OF EACH PAIR

TABLE 1: OPTIMAL T AND EFFICIENCY VALUES

M1 VALUES	M2 VALUES								
	0.1000	0.2000	0.3000	0.4000	0.5000	0.6000	0.7000	0.8000	0.9000
0.01	0.0002	0.0001	0.0001	0.0000	0.0000	0.0000	0.0000	0.0000	0.0000
	1.0000	1.0000	1.0000	1.0000	1.0000	1.0000	1.0000	0.9999	0.9999
0.02	0.0001	0.0000	0.0000	0.0000	0.0000	0.0000	0.0000	0.0000	0.0000
	1.0000	1.0000	1.0000	0.9999	0.9999	0.9999	0.9998	0.9998	0.9998
0.03	0.0001	0.0000	0.0000	0.0000	0.0000	0.0000	0.0000	0.0000	0.0000
	1.0000	0.9999	0.9999	0.9999	0.9998	0.9997	0.9997	0.9996	0.9995
0.04	0.0001	0.0000	0.0000	0.0000	0.0000	0.0000	0.0000	0.0000	0.0000
	1.0000	0.9999	0.9998	0.9998	0.9997	0.9996	0.9995	0.9993	0.9992
0.05	0.0000	0.0000	0.0000	0.0000	0.0000	0.0000	0.0000	0.0000	0.0000
	0.9999	0.9998	0.9998	0.9996	0.9995	0.9994	0.9992	0.9991	0.9989
0.06	0.0000	0.0000	0.0000	0.0000	0.0000	0.0000	0.0000	0.0000	0.0000
	0.9999	0.9998	0.9997	0.9995	0.9994	0.9992	0.9990	0.9987	0.9985
0.07	0.0000	0.0000	0.0000	0.0000	0.0000	0.0000	0.0000	0.0000	0.0000
	0.9999	0.9997	0.9996	0.9994	0.9992	0.9989	0.9987	0.9984	0.9981
0.08	0.0000	0.0000	0.0000	0.0000	0.0000	0.0000	0.0000	0.0000	0.0000
	0.9999	0.9997	0.9995	0.9993	0.9990	0.9987	0.9984	0.9981	0.9977
0.09	0.0000	0.0000	0.0000	0.0000	0.0000	0.0000	0.0000	0.0000	0.0000
	0.9998	0.9996	0.9994	0.9991	0.9988	0.9985	0.9981	0.9977	0.9973

FOR EACH ENTRY IN THE TABLE:

T* = TOP VALUE OF EACH PAIR

EFF = BOTTOM VALUE OF EACH PAIR

TABLE 1: OPTIMAL T AND EFFICIENCY VALUES

M1 VALUES	M2 VALUES								
	1.0000	2.0000	3.0000	4.0000	5.0000	6.0000	7.0000	8.0000	9.0000
0.01	0.0000	0.0000	0.0000	0.0000	0.0000	0.0000	0.0001	0.0001	0.0002
	0.9999	0.9997	0.9992	0.9983	0.9970	0.9953	0.9930	0.9902	0.9871
0.02	0.0000	0.0000	0.0000	0.0000	0.0000	0.0000	0.0000	0.0000	0.0001
	0.9997	0.9990	0.9975	0.9953	0.9920	0.9878	0.9827	0.9766	0.9698
0.03	0.0000	0.0000	0.0000	0.0000	0.0000	0.0000	0.0000	0.0000	0.0001
	0.9994	0.9980	0.9955	0.9916	0.9863	0.9795	0.9714	0.9622	0.9520
0.04	0.0000	0.0000	0.0000	0.0000	0.0000	0.0000	0.0000	0.0000	0.0001
	0.9991	0.9969	0.9931	0.9876	0.9801	0.9709	0.9600	0.9478	0.9344
0.05	0.0000	0.0000	0.0000	0.0000	0.0000	0.0000	0.0000	0.0000	0.0000
	0.9987	0.9957	0.9907	0.9834	0.9738	0.9621	0.9486	0.9336	0.9174
0.06	0.0000	0.0000	0.0000	0.0000	0.0000	0.0000	0.0000	0.0000	0.0000
	0.9982	0.9944	0.9881	0.9791	0.9675	0.9535	0.9375	0.9199	0.9011
0.07	0.0000	0.0000	0.0000	0.0000	0.0000	0.0000	0.0000	0.0000	0.0000
	0.9978	0.9930	0.9854	0.9748	0.9612	0.9450	0.9266	0.9066	0.8855
0.08	0.0000	0.0000	0.0000	0.0000	0.0000	0.0000	0.0000	0.0000	0.0000
	0.9973	0.9917	0.9828	0.9705	0.9550	0.9367	0.9161	0.8939	0.8706
0.09	0.0000	0.0000	0.0000	0.0000	0.0000	0.0000	0.0000	0.0000	0.0000
	0.9968	0.9903	0.9801	0.9662	0.9489	0.9286	0.9060	0.8817	0.8565

FOR EACH ENTRY IN THE TABLE:

T* = TOP VALUE OF EACH PAIR

EFF = BOTTOM VALUE OF EACH PAIR

TABLE 1: OPTIMAL T AND EFFICIENCY VALUES

M1 VALUES	M2 VALUES								
	0.0100	0.0200	0.0300	0.0400	0.0500	0.0600	0.0700	0.0800	0.0900
0.10	0.0003	0.0001	0.0001	0.0001	0.0000	0.0000	0.0000	0.0000	0.0000
	1.0000	1.0000	0.9999	0.9999	0.9999	0.9999	0.9999	0.9998	0.9998
0.20	0.0002	0.0001	0.0000	0.0000	0.0000	0.0000	0.0000	0.0000	0.0000
	1.0001	0.9999	0.9999	0.9999	0.9998	0.9997	0.9997	0.9996	0.9996
0.30	0.0001	0.0001	0.0000	0.0000	0.0000	0.0000	0.0000	0.0000	0.0000
	1.0001	0.9999	0.9999	0.9998	0.9997	0.9996	0.9996	0.9995	0.9994
0.40	0.0001	0.0001	0.0000	0.0000	0.0000	0.0000	0.0000	0.0000	0.0000
	1.0003	0.9999	0.9999	0.9998	0.9997	0.9996	0.9996	0.9995	0.9994
0.50	0.0001	0.0001	0.0000	0.0000	0.0000	0.0000	0.0000	0.0000	0.0000
	1.0005	0.9999	0.9999	0.9998	0.9997	0.9997	0.9996	0.9995	0.9995
0.60	0.0001	0.0001	0.0000	0.0000	0.0000	0.0000	0.0000	0.0000	0.0000
	1.0008	1.0000	1.0000	0.9998	0.9998	0.9998	0.9997	0.9996	0.9996
0.70	0.0002	0.0001	0.0001	0.0000	0.0000	0.0000	0.0000	0.0000	0.0000
	1.0011	1.0000	1.0002	0.9999	0.9999	0.9999	0.9998	0.9998	0.9997
0.80	0.0003	0.0001	0.0001	0.0001	0.0000	0.0000	0.0000	0.0000	0.0000
	1.0016	1.0001	1.0003	1.0000	1.0000	0.9999	0.9999	0.9999	0.9999
0.90	0.0006	0.0002	0.0001	0.0001	0.0001	0.0001	0.0000	0.0000	0.0000
	1.0022	1.0001	1.0000	1.0000	1.0001	1.0000	1.0000	1.0000	1.0000

FOR EACH ENTRY IN THE TABLE:

T* = TOP VALUE OF EACH PAIR

EFF = BOTTOM VALUE OF EACH PAIR

TABLE 1: OPTIMAL T AND EFFICIENCY VALUES

M1 VALUES	M2 VALUES								
	0.1000	0.2000	0.3000	0.4000	0.5000	0.6000	0.7000	0.8000	0.9000
0.10	0.0000	0.0000	0.0000	0.0000	0.0000	0.0000	0.0000	0.0000	0.0000
	0.9998	0.9996	0.9993	0.9990	0.9986	0.9982	0.9978	0.9974	0.9969
0.20	0.0000	0.0000	0.0000	0.0000	0.0000	0.0000	0.0000	0.0000	0.0000
	0.9995	0.9990	0.9983	0.9976	0.9968	0.9960	0.9950	0.9940	0.9929
0.30	0.0000	0.0000	0.0000	0.0000	0.0000	0.0000	0.0000	0.0000	0.0000
	0.9994	0.9986	0.9978	0.9968	0.9957	0.9945	0.9931	0.9917	0.9901
0.40	0.0000	0.0000	0.0000	0.0000	0.0000	0.0000	0.0000	0.0000	0.0000
	0.9993	0.9985	0.9976	0.9965	0.9952	0.9938	0.9922	0.9905	0.9887
0.50	0.0000	0.0000	0.0000	0.0000	0.0000	0.0000	0.0000	0.0000	0.0000
	0.9994	0.9986	0.9977	0.9966	0.9953	0.9938	0.9922	0.9903	0.9883
0.60	0.0000	0.0000	0.0000	0.0000	0.0000	0.0000	0.0000	0.0000	0.0000
	0.9996	0.9989	0.9980	0.9970	0.9958	0.9943	0.9927	0.9909	0.9888
0.70	0.0000	0.0000	0.0000	0.0000	0.0000	0.0000	0.0000	0.0000	0.0000
	0.9997	0.9992	0.9985	0.9976	0.9965	0.9951	0.9936	0.9918	0.9899
0.80	0.0000	0.0000	0.0000	0.0000	0.0000	0.0000	0.0000	0.0000	0.0000
	0.9998	0.9995	0.9989	0.9982	0.9973	0.9961	0.9947	0.9930	0.9912
0.90	0.0000	0.0000	0.0000	0.0000	0.0000	0.0000	0.0000	0.0000	0.0000
	0.9999	0.9997	0.9993	0.9988	0.9980	0.9970	0.9958	0.9943	0.9926

FOR EACH ENTRY IN THE TABLE:

T* = TOP VALUE OF EACH PAIR

EFF = BOTTOM VALUE OF EACH PAIR

TABLE 1: OPTIMAL T AND EFFICIENCY VALUES

M1 VALUES	M2 VALUES								
	1.0000	2.0000	3.0000	4.0000	5.0000	6.0000	7.0000	8.0000	9.0000
0.10	0.0000	0.0000	0.0000	0.0000	0.0000	0.0000	0.0000	0.0000	0.0000
	0.9963	0.9889	0.9775	0.9620	0.9429	0.9207	0.8962	0.8701	0.8430
0.20	0.0000	0.0000	0.0000	0.0000	0.0000	0.0000	0.0000	0.0000	0.0000
	0.9917	0.9761	0.9536	0.9252	0.8922	0.8559	0.8177	0.7788	0.7398
0.30	0.0000	0.0000	0.0000	0.0000	0.0000	0.0000	0.0000	0.0000	0.0000
	0.9885	0.9664	0.9357	0.8983	0.8563	0.8115	0.7656	0.7197	0.6747
0.40	0.0000	0.0000	0.0000	0.0000	0.0000	0.0000	0.0000	0.0000	0.0000
	0.9867	0.9601	0.9234	0.8796	0.8315	0.7812	0.7303	0.6801	0.6315
0.50	0.0000	0.0000	0.0000	0.0000	0.0000	0.0000	0.0000	0.0000	0.0000
	0.9862	0.9566	0.9155	0.8671	0.8147	0.7605	0.7062	0.6529	0.6017
0.60	0.0000	0.0000	0.0000	0.0000	0.0000	0.0000	0.0000	0.0000	0.0000
	0.9866	0.9552	0.9111	0.8593	0.8037	0.7466	0.6897	0.6341	0.5808
0.70	0.0000	0.0000	0.0000	0.0000	0.0000	0.0000	0.0000	0.0000	0.0000
	0.9877	0.9555	0.9092	0.8550	0.7970	0.7377	0.6787	0.6212	0.5661
0.80	0.0000	0.0000	0.0000	0.0000	0.0000	0.0000	0.0000	0.0000	0.0000
	0.9891	0.9569	0.9093	0.8534	0.7935	0.7325	0.6718	0.6125	0.5558
0.90	0.0000	0.0000	0.0000	0.0000	0.0000	0.0000	0.0000	0.0000	0.0000
	0.9906	0.9590	0.9108	0.8537	0.7925	0.7300	0.6678	0.6070	0.5487

FOR EACH ENTRY IN THE TABLE:

T* = TOP VALUE OF EACH PAIR

EFF = BOTTOM VALUE OF EACH PAIR

TABLE 1: OPTIMAL T AND EFFICIENCY VALUES

M1 VALUES	M2 VALUES								
	0.0100	0.0200	0.0300	0.0400	0.0500	0.0600	0.0700	0.0800	0.0900
1.00	0.0023	0.0015	0.0009	0.0006	0.0003	0.0002	0.0002	0.0001	0.0001
	1.0030	1.0002	1.0000	1.0000	1.0001	1.0000	1.0000	1.0000	1.0000
2.00	0.1814	0.1814	0.1814	0.1800	0.1799	0.1799	0.1800	0.1791	0.1790
	1.0003	1.0025	1.0002	1.0008	1.0000	1.0001	0.9999	0.9999	1.0000
3.00	0.3161	0.3170	0.3171	0.3184	0.3190	0.3199	0.3199	0.3208	0.3214
	1.0018	1.0003	1.0017	1.0002	1.0006	1.0000	1.0001	0.9999	0.9999
4.00	0.4138	0.4161	0.4171	0.4190	0.4200	0.4219	0.4228	0.4244	0.4256
	1.0066	1.0015	1.0003	1.0011	1.0001	1.0005	0.9999	1.0000	1.0003
5.00	0.4899	0.4914	0.4928	0.4946	0.4962	0.4984	0.5002	0.5019	0.5037
	1.0199	1.0050	1.0010	1.0042	1.0007	1.0001	1.0003	1.0009	1.0000
6.00	0.5471	0.5499	0.5514	0.5537	0.5561	0.5579	0.5600	0.5619	0.5637
	1.0517	1.0140	1.0033	1.0007	1.0027	1.0005	1.0016	1.0002	1.0007
7.00	0.5937	0.5961	0.5984	0.6008	0.6028	0.6047	0.6070	0.6091	0.6114
	1.1239	1.0012	1.0088	1.0022	1.0005	1.0019	1.0004	1.0012	1.0001
8.00	0.6314	0.6337	0.6361	0.6384	0.6408	0.6432	0.6455	0.6479	0.6502
	1.0051	1.0030	1.0011	1.0057	1.0016	1.0052	1.0014	1.0003	1.0009
9.00	0.6628	0.6652	0.6679	0.6699	0.6720	0.6746	0.6770	0.6796	0.6815
	1.0106	1.0066	1.0026	1.0134	1.0040	1.0012	1.0038	1.0011	1.0029

FOR EACH ENTRY IN THE TABLE:

T* = TOP VALUE OF EACH PAIR

EFF = BOTTOM VALUE OF EACH PAIR

TABLE 1: OPTIMAL T AND EFFICIENCY VALUES

M1 VALUES	M2 VALUES								
	0.1000	0.2000	0.3000	0.4000	0.5000	0.6000	0.7000	0.8000	0.9000
1.00	0.0001	0.0000	0.0000	0.0000	0.0000	0.0000	0.0000	0.0000	0.0000
	1.0000	0.9998	0.9996	0.9992	0.9985	0.9977	0.9967	0.9954	0.9939
2.00	0.1790	0.1748	0.1702	0.1643	0.1574	0.1496	0.1403	0.1302	0.1181
	0.9998	0.9993	0.9984	0.9970	0.9953	0.9933	0.9910	0.9885	0.9858
3.00	0.3219	0.3284	0.3343	0.3402	0.3459	0.3514	0.3571	0.3621	0.3673
	0.9999	0.9989	0.9972	0.9949	0.9919	0.9882	0.9837	0.9786	0.9729
4.00	0.4270	0.4403	0.4544	0.4688	0.4835	0.4984	0.5139	0.5296	0.5457
	0.9998	0.9987	0.9969	0.9944	0.9912	0.9874	0.9830	0.9781	0.9728
5.00	0.5055	0.5237	0.5422	0.5610	0.5800	0.5988	0.6174	0.6360	0.6542
	1.0002	0.9987	0.9970	0.9947	0.9920	0.9888	0.9854	0.9818	0.9780
6.00	0.5662	0.5866	0.6077	0.6281	0.6484	0.6681	0.6871	0.7054	0.7227
	0.9999	0.9992	0.9973	0.9954	0.9932	0.9909	0.9883	0.9858	0.9834
7.00	0.6137	0.6359	0.6574	0.6786	0.6988	0.7180	0.7362	0.7533	0.7691
	1.0006	0.9992	0.9977	0.9962	0.9944	0.9926	0.9908	0.9891	0.9877
8.00	0.6525	0.6748	0.6966	0.7173	0.7370	0.7553	0.7723	0.7880	0.8024
	1.0001	0.9993	0.9980	0.9968	0.9955	0.9942	0.9929	0.9916	0.9908
9.00	0.6840	0.7066	0.7281	0.7481	0.7668	0.7841	0.7999	0.8142	0.8275
	1.0008	1.0001	0.9988	0.9974	0.9965	0.9952	0.9944	0.9937	0.9928

FOR EACH ENTRY IN THE TABLE:

T* = TOP VALUE OF EACH PAIR

EFF = BOTTOM VALUE OF EACH PAIR

TABLE 1: OPTIMAL T AND EFFICIENCY VALUES

M1 VALUES	M2 VALUES								
	1.0000	2.0000	3.0000	4.0000	5.0000	6.0000	7.0000	8.0000	9.0000
1.00	0.0000	0.0000	0.0000	0.0000	0.0000	0.0000	0.0000	0.0000	0.0000
	0.9921	0.9616	0.9133	0.8554	0.7932	0.7296	0.6661	0.6039	0.5442
2.00	0.1046	0.0000	0.0000	0.0000	0.0000	0.0000	0.0000	0.0000	0.0000
	0.9831	0.9616	0.9282	0.8788	0.8203	0.7565	0.6894	0.6206	0.5520
3.00	0.3721	0.3908	0.0000	0.0000	0.0000	0.0000	0.0000	0.0000	0.0000
	0.9666	0.8851	0.8304	0.8008	0.7610	0.7139	0.6611	0.6035	0.5427
4.00	0.5618	0.7157	0.8141	0.8680	0.8994	0.9195	0.9332	0.9431	0.9505
	0.9671	0.9061	0.8583	0.8251	0.7991	0.7741	0.7450	0.7090	0.6647
5.00	0.6717	0.8055	0.8733	0.9089	0.9299	0.9435	0.9528	0.9596	0.9648
	0.9743	0.9421	0.9219	0.9077	0.8960	0.8835	0.8675	0.8450	0.8148
6.00	0.7392	0.8509	0.9028	0.9298	0.9458	0.9561	0.9633	0.9685	0.9725
	0.9811	0.9660	0.9590	0.9545	0.9505	0.9462	0.9391	0.9289	0.9127
7.00	0.7838	0.8787	0.9209	0.9427	0.9557	0.9640	0.9699	0.9741	0.9774
	0.9862	0.9795	0.9784	0.9780	0.9776	0.9767	0.9754	0.9724	0.9669
8.00	0.8157	0.8977	0.9332	0.9515	0.9624	0.9695	0.9744	0.9780	0.9808
	0.9899	0.9872	0.9883	0.9895	0.9905	0.9921	0.9936	0.9933	0.9931
9.00	0.8393	0.9114	0.9421	0.9580	0.9674	0.9735	0.9778	0.9809	0.9833
	0.9923	0.9917	0.9935	0.9952	0.9976	1.0002	1.0032	1.0062	1.0092

FOR EACH ENTRY IN THE TABLE:

T* = TOP VALUE OF EACH PAIR

EFF = BOTTOM VALUE OF EACH PAIR

TABLE 2: OPTIMAL T AND EFFICIENCY VALUES RELATIVE TO THE METHOD OF MOMENTS

M1 VALUES	M2 VALUES								
	0.0100	0.0200	0.0300	0.0400	0.0500	0.0600	0.0700	0.0800	0.0900
0.01	0.0024	0.0009	0.0009	0.0006	0.0006	0.0003	0.0003	0.0003	0.0002
	1.0035	1.0070	1.0105	1.0140	1.0175	1.0211	1.0247	1.0283	1.0318
0.02	0.0015	0.0006	0.0003	0.0003	0.0002	0.0002	0.0002	0.0001	0.0001
	1.0036	1.0072	1.0109	1.0145	1.0182	1.0219	1.0256	1.0293	1.0331
0.03	0.0009	0.0003	0.0003	0.0002	0.0002	0.0001	0.0001	0.0001	0.0001
	1.0037	1.0075	1.0113	1.0151	1.0189	1.0227	1.0265	1.0304	1.0343
0.04	0.0006	0.0003	0.0002	0.0001	0.0001	0.0001	0.0001	0.0001	0.0001
	1.0039	1.0077	1.0116	1.0156	1.0195	1.0235	1.0275	1.0315	1.0355
0.05	0.0006	0.0003	0.0002	0.0001	0.0001	0.0001	0.0001	0.0001	0.0000
	1.0040	1.0080	1.0120	1.0160	1.0201	1.0242	1.0283	1.0325	1.0366
0.06	0.0006	0.0002	0.0001	0.0001	0.0001	0.0001	0.0000	0.0000	0.0000
	1.0041	1.0082	1.0124	1.0165	1.0207	1.0250	1.0292	1.0335	1.0378
0.07	0.0003	0.0002	0.0001	0.0001	0.0001	0.0001	0.0000	0.0000	0.0000
	1.0042	1.0084	1.0127	1.0170	1.0213	1.0257	1.0300	1.0344	1.0389
0.08	0.0003	0.0002	0.0001	0.0001	0.0001	0.0000	0.0000	0.0000	0.0000
	1.0043	1.0087	1.0130	1.0175	1.0219	1.0264	1.0309	1.0354	1.0399
0.09	0.9953	0.0001	0.0001	0.0001	0.0001	0.0000	0.0000	0.0000	0.0000
	1.0176	1.0089	1.0134	1.0179	1.0225	1.0270	1.0317	1.0363	1.0410

FOR EACH ENTRY IN THE TABLE:

T* = TOP VALUE OF EACH PAIR

EFF = BOTTOM VALUE OF EACH PAIR

TABLE 2: OPTIMAL T AND EFFICIENCY VALUES RELATIVE TO THE METHOD OF MOMENTS

M1 VALUES	M2 VALUES								
	0.1000	0.2000	0.3000	0.4000	0.5000	0.6000	0.7000	0.8000	0.9000
0.01	0.0002	0.0001	0.0001	0.0000	0.0000	0.0000	0.0000	0.0000	0.0000
	1.0355	1.0720	1.1089	1.1456	1.1818	1.2169	1.2508	1.2832	1.3141
0.02	0.0001	0.0000	0.0000	0.0000	0.0000	0.0000	0.0000	0.0000	0.0000
	1.0368	1.0750	1.1137	1.1524	1.1906	1.2280	1.2643	1.2992	1.3326
0.03	0.0001	0.0000	0.0000	0.0000	0.0000	0.0000	0.0000	0.0000	0.0000
	1.0382	1.0779	1.1183	1.1589	1.1992	1.2388	1.2774	1.3147	1.3505
0.04	0.0000	0.0000	0.0000	0.0000	0.0000	0.0000	0.0000	0.0000	0.0000
	1.0395	1.0807	1.1228	1.1653	1.2076	1.2493	1.2901	1.3297	1.3679
0.05	0.0000	0.0000	0.0000	0.0000	0.0000	0.0000	0.0000	0.0000	0.0000
	1.0408	1.0835	1.1272	1.1715	1.2157	1.2594	1.3023	1.3442	1.3847
0.06	0.0000	0.0000	0.0000	0.0000	0.0000	0.0000	0.0000	0.0000	0.0000
	1.0421	1.0862	1.1315	1.1775	1.2235	1.2692	1.3142	1.3582	1.4010
0.07	0.0000	0.0000	0.0000	0.0000	0.0000	0.0000	0.0000	0.0000	0.0000
	1.0433	1.0888	1.1357	1.1833	1.2312	1.2788	1.3258	1.3718	1.4167
0.08	0.0000	0.0000	0.0000	0.0000	0.0000	0.0000	0.0000	0.0000	0.0000
	1.0445	1.0913	1.1397	1.1890	1.2386	1.2880	1.3370	1.3850	1.4320
0.09	0.0000	0.0000	0.0000	0.0000	0.0000	0.0000	0.0000	0.0000	0.0000
	1.0457	1.0938	1.1437	1.1945	1.2458	1.2970	1.3478	1.3978	1.4468

FOR EACH ENTRY IN THE TABLE:

T* = TOP VALUE OF EACH PAIR

EFF = BOTTOM VALUE OF EACH PAIR

TABLE 2: OPTIMAL T AND EFFICIENCY VALUES RELATIVE TO THE METHOD OF MOMENTS

M1 VALUES	M2 VALUES								
	1.0000	2.0000	3.0000	4.0000	5.0000	6.0000	7.0000	8.0000	9.0000
0.01	0.0000	0.0000	0.0000	0.0000	0.0000	0.0000	0.0000	0.0001	0.0001
	1.3431	1.5361	1.5906	1.5762	1.5384	1.4987	1.4652	1.4394	1.4206
0.02	0.0000	0.0000	0.0000	0.0000	0.0000	0.0000	0.0000	0.0000	0.0001
	1.3643	1.5852	1.6650	1.6709	1.6494	1.6234	1.6020	1.5875	1.5794
0.03	0.0000	0.0000	0.0000	0.0000	0.0000	0.0000	0.0000	0.0000	0.0000
	1.3848	1.6323	1.7359	1.7605	1.7537	1.7397	1.7285	1.7232	1.7238
0.04	0.0000	0.0000	0.0000	0.0000	0.0000	0.0000	0.0000	0.0000	0.0000
	1.4046	1.6776	1.8036	1.8456	1.8519	1.8482	1.8457	1.8480	1.8554
0.05	0.0000	0.0000	0.0000	0.0000	0.0000	0.0000	0.0000	0.0000	0.0000
	1.4238	1.7211	1.8682	1.9262	1.9444	1.9497	1.9545	1.9629	1.9757
0.06	0.0000	0.0000	0.0000	0.0000	0.0000	0.0000	0.0000	0.0000	0.0000
	1.4423	1.7629	1.9300	2.0028	2.0315	2.0447	2.0555	2.0689	2.0859
0.07	0.0000	0.0000	0.0000	0.0000	0.0000	0.0000	0.0000	0.0000	0.0000
	1.4603	1.8031	1.9890	2.0755	2.1137	2.1337	2.1495	2.1668	2.1872
0.08	0.0000	0.0000	0.0000	0.0000	0.0000	0.0000	0.0000	0.0000	0.0000
	1.4776	1.8418	2.0454	2.1446	2.1913	2.2171	2.2371	2.2576	2.2804
0.09	0.0000	0.0000	0.0000	0.0000	0.0000	0.0000	0.0000	0.0000	0.0000
	1.4944	1.8790	2.0994	2.2102	2.2647	2.2954	2.3188	2.3417	2.3663

FOR EACH ENTRY IN THE TABLE:

T* = TOP VALUE OF EACH PAIR

EFF = BOTTOM VALUE OF EACH PAIR

TABLE 2: OPTIMAL T AND EFFICIENCY VALUES RELATIVE TO THE METHOD OF MOMENTS

M1 VALUES	M2 VALUES								
	0.0100	0.0200	0.0300	0.0400	0.0500	0.0600	0.0700	0.0800	0.0900
0.10	0.0003	0.0001	0.0001	0.0001	0.0000	0.0000	0.0000	0.0000	0.0000
	1.0045	1.0091	1.0137	1.0183	1.0230	1.0277	1.0324	1.0372	1.0420
0.20	0.0002	0.0001	0.0000	0.0000	0.0000	0.0000	0.0000	0.0000	0.0000
	1.0055	1.0110	1.0165	1.0222	1.0278	1.0335	1.0392	1.0450	1.0509
0.30	0.0001	0.0001	0.0000	0.0000	0.0000	0.0000	0.0000	0.0000	0.0000
	1.0062	1.0125	1.0188	1.0252	1.0316	1.0381	1.0446	1.0512	1.0578
0.40	0.0001	0.0001	0.0000	0.0000	0.0000	0.0000	0.0000	0.0000	0.0000
	1.0068	1.0136	1.0206	1.0275	1.0346	1.0417	1.0488	1.0560	1.0632
0.50	0.0001	0.0001	0.0000	0.0000	0.0000	0.0000	0.0000	0.0000	0.0000
	1.0073	1.0146	1.0220	1.0294	1.0369	1.0445	1.0521	1.0598	1.0675
0.60	0.0001	0.0001	0.0000	0.0000	0.0000	0.0000	0.0000	0.0000	0.0000
	1.0076	1.0153	1.0230	1.0309	1.0387	1.0466	1.0546	1.0627	1.0708
0.70	0.0002	0.0001	0.0000	0.0000	0.0000	0.0000	0.0000	0.0000	0.0000
	1.0079	1.0159	1.0239	1.0320	1.0401	1.0483	1.0566	1.0649	1.0732
0.80	0.0003	0.0001	0.0001	0.0000	0.0000	0.0000	0.0000	0.0000	0.0000
	1.0081	1.0163	1.0245	1.0328	1.0411	1.0495	1.0580	1.0665	1.0751
0.90	0.0006	0.0002	0.0001	0.0001	0.0001	0.0001	0.0000	0.0000	0.0000
	1.0083	1.0166	1.0250	1.0334	1.0419	1.0504	1.0590	1.0676	1.0763

FOR EACH ENTRY IN THE TABLE:

T* = TOP VALUE OF EACH PAIR

EFF = BOTTOM VALUE OF EACH PAIR

TABLE 2: OPTIMAL T AND EFFICIENCY VALUES RELATIVE TO THE METHOD OF MOMENTS

M1 VALUES	M2 VALUES								
	0.1000	0.2000	0.3000	0.4000	0.5000	0.6000	0.7000	0.8000	0.9000
0.10	0.0000	0.0000	0.0000	0.0000	0.0000	0.0000	0.0000	0.0000	0.0000
	1.0468	1.0962	1.1475	1.1999	1.2528	1.3058	1.3583	1.4102	1.4611
0.20	0.0000	0.0000	0.0000	0.0000	0.0000	0.0000	0.0000	0.0000	0.0000
	1.0567	1.1172	1.1806	1.2460	1.3127	1.3801	1.4477	1.5149	1.5815
0.30	0.0000	0.0000	0.0000	0.0000	0.0000	0.0000	0.0000	0.0000	0.0000
	1.0645	1.1335	1.2060	1.2810	1.3577	1.4355	1.5136	1.5916	1.6689
0.40	0.0000	0.0000	0.0000	0.0000	0.0000	0.0000	0.0000	0.0000	0.0000
	1.0705	1.1460	1.2253	1.3074	1.3913	1.4764	1.5619	1.6472	1.7319
0.50	0.0000	0.0000	0.0000	0.0000	0.0000	0.0000	0.0000	0.0000	0.0000
	1.0753	1.1557	1.2400	1.3271	1.4161	1.5062	1.5966	1.6868	1.7762
0.60	0.0000	0.0000	0.0000	0.0000	0.0000	0.0000	0.0000	0.0000	0.0000
	1.0789	1.1630	1.2509	1.3415	1.4339	1.5272	1.6208	1.7139	1.8061
0.70	0.0000	0.0000	0.0000	0.0000	0.0000	0.0000	0.0000	0.0000	0.0000
	1.0817	1.1684	1.2587	1.3517	1.4461	1.5413	1.6365	1.7311	1.8246
0.80	0.0000	0.0000	0.0000	0.0000	0.0000	0.0000	0.0000	0.0000	0.0000
	1.0837	1.1722	1.2641	1.3583	1.4537	1.5497	1.6454	1.7403	1.8340
0.90	0.0000	0.0000	0.0000	0.0000	0.0000	0.0000	0.0000	0.0000	0.0000
	1.0851	1.1747	1.2673	1.3620	1.4576	1.5535	1.6488	1.7431	1.8360

FOR EACH ENTRY IN THE TABLE:

T* = TOP VALUE OF EACH PAIR

EFF = BOTTOM VALUE OF EACH PAIR

TABLE 2: OPTIMAL T AND EFFICIENCY VALUES RELATIVE TO THE METHOD OF MOMENTS

M1 VALUES	M2 VALUES								
	1.0000	2.0000	3.0000	4.0000	5.0000	6.0000	7.0000	8.0000	9.0000
0.10	0.0000	0.0000	0.0000	0.0000	0.0000	0.0000	0.0000	0.0000	0.0000
	1.5107	1.9147	2.1510	2.2726	2.3340	2.3690	2.3952	2.4198	2.4456
0.20	0.0000	0.0000	0.0000	0.0000	0.0000	0.0000	0.0000	0.0000	0.0000
	1.6470	2.2057	2.5596	2.7538	2.8536	2.9059	2.9375	2.9612	2.9826
0.30	0.0000	0.0000	0.0000	0.0000	0.0000	0.0000	0.0000	0.0000	0.0000
	1.7453	2.4035	2.8241	3.0505	3.1586	3.2062	3.2269	3.2374	3.2451
0.40	0.0000	0.0000	0.0000	0.0000	0.0000	0.0000	0.0000	0.0000	0.0000
	1.8155	2.5360	2.9925	3.2305	3.3348	3.3711	3.3780	3.3745	3.3688
0.50	0.0000	0.0000	0.0000	0.0000	0.0000	0.0000	0.0000	0.0000	0.0000
	1.8644	2.6212	3.0942	3.3326	3.4282	3.4521	3.4460	3.4301	3.4133
0.60	0.0000	0.0000	0.0000	0.0000	0.0000	0.0000	0.0000	0.0000	0.0000
	1.8969	2.6713	3.1482	3.3808	3.4659	3.4780	3.4607	3.4348	3.4092
0.70	0.0000	0.0000	0.0000	0.0000	0.0000	0.0000	0.0000	0.0000	0.0000
	1.9165	2.6948	3.1669	3.3903	3.4646	3.4664	3.4397	3.4059	3.3734
0.80	0.0000	0.0000	0.0000	0.0000	0.0000	0.0000	0.0000	0.0000	0.0000
	1.9259	2.6979	3.1593	3.3715	3.4354	3.4283	3.3942	3.3541	3.3164
0.90	0.0000	0.0000	0.0000	0.0000	0.0000	0.0000	0.0000	0.0000	0.0000
	1.9269	2.6850	3.1318	3.3318	3.3861	3.3713	3.3313	3.2864	3.2449

FOR EACH ENTRY IN THE TABLE:

T* = TOP VALUE OF EACH PAIR

EFF = BOTTOM VALUE OF EACH PAIR

TABLE 2: OPTIMAL T AND EFFICIENCY VALUES RELATIVE TO THE METHOD OF MOMENTS

M1 VALUES	M2 VALUES								
	0.0100	0.0200	0.0300	0.0400	0.0500	0.0600	0.0700	0.0800	0.0900
1.00	0.0023	0.0015	0.0009	0.0006	0.0003	0.0002	0.0002	0.0001	0.0001
	1.0084	1.0168	1.0253	1.0338	1.0424	1.0510	1.0597	1.0684	1.0771
2.00	0.1814	0.1814	0.1814	0.1800	0.1799	0.1799	0.1800	0.1791	0.1790
	1.0082	1.0164	1.0246	1.0327	1.0409	1.0491	1.0573	1.0654	1.0736
3.00	0.3161	0.3170	0.3171	0.3184	0.3190	0.3199	0.3199	0.3208	0.3214
	1.0074	1.0147	1.0221	1.0293	1.0365	1.0437	1.0508	1.0579	1.0649
4.00	0.4138	0.4161	0.4171	0.4190	0.4200	0.4219	0.4228	0.4244	0.4256
	1.0066	1.0132	1.0196	1.0260	1.0324	1.0386	1.0448	1.0509	1.0569
5.00	0.4899	0.4914	0.4928	0.4946	0.4962	0.4984	0.5002	0.5019	0.5037
	1.0059	1.0118	1.0175	1.0232	1.0288	1.0343	1.0397	1.0451	1.0503
6.00	0.5484	0.5499	0.5514	0.5537	0.5561	0.5579	0.5600	0.5619	0.5637
	1.0054	1.0106	1.0158	1.0209	1.0259	1.0308	1.0356	1.0403	1.0449
7.00	0.5937	0.5961	0.5984	0.6008	0.6028	0.6047	0.6070	0.6091	0.6114
	1.0049	1.0097	1.0144	1.0189	1.0234	1.0278	1.0321	1.0363	1.0404
8.00	0.6314	0.6337	0.6361	0.6384	0.6408	0.6432	0.6455	0.6479	0.6502
	1.0045	1.0089	1.0131	1.0173	1.0214	1.0254	1.0293	1.0331	1.0368
9.00	0.6628	0.6652	0.6679	0.6699	0.6720	0.6746	0.6770	0.6796	0.6815
	1.0041	1.0082	1.0121	1.0159	1.0197	1.0233	1.0269	1.0303	1.0337

FOR EACH ENTRY IN THE TABLE:

T* = TOP VALUE OF EACH PAIR

EFF = BOTTOM VALUE OF EACH PAIR

TABLE 2: OPTIMAL T AND EFFICIENCY VALUES RELATIVE TO THE METHOD OF MOMENTS

M1 VALUES	M2 VALUES								
	0.1000	0.2000	0.3000	0.4000	0.5000	0.6000	0.7000	0.8000	0.9000
1.00	0.0001	0.0000	0.0000	0.0000	0.0000	0.0000	0.0000	0.0000	0.0000
	1.0859	1.1760	1.2689	1.3633	1.4584	1.5534	1.6476	1.7406	1.8320
2.00	0.1790	0.1748	0.1702	0.1643	0.1577	0.1497	0.1406	0.1299	0.1181
	1.0817	1.1623	1.2403	1.3152	1.3865	1.4540	1.5177	1.5777	1.6342
3.00	0.3219	0.3284	0.3343	0.3402	0.3459	0.3515	0.3571	0.3621	0.3673
	1.0719	1.1386	1.1992	1.2535	1.3015	1.3434	1.3795	1.4104	1.4363
4.00	0.4270	0.4403	0.4544	0.4688	0.4835	0.4984	0.5139	0.5296	0.5457
	1.0629	1.1183	1.1660	1.2063	1.2396	1.2666	1.2880	1.3044	1.3167
5.00	0.5055	0.5237	0.5421	0.5610	0.5800	0.5988	0.6175	0.6360	0.6541
	1.0555	1.1023	1.1409	1.1720	1.1964	1.2151	1.2290	1.2388	1.2455
6.00	0.5662	0.5866	0.6077	0.6281	0.6484	0.6681	0.6872	0.7054	0.7227
	1.0494	1.0898	1.1219	1.1468	1.1656	1.1794	1.1892	1.1957	1.1997
7.00	0.6137	0.6359	0.6574	0.6786	0.6988	0.7180	0.7362	0.7533	0.7691
	1.0445	1.0798	1.1071	1.1277	1.1428	1.1535	1.1608	1.1654	1.1681
8.00	0.6525	0.6748	0.6966	0.7175	0.7370	0.7553	0.7723	0.7880	0.8024
	1.0404	1.0717	1.0954	1.1129	1.1254	1.1340	1.1397	1.1432	1.1450
9.00	0.6840	0.7066	0.7281	0.7481	0.7668	0.7841	0.7999	0.8142	0.8275
	1.0369	1.0651	1.0859	1.1010	1.1117	1.1188	1.1235	1.1262	1.1275

FOR EACH ENTRY IN THE TABLE:

T* = TOP VALUE OF EACH PAIR

EFF = BOTTOM VALUE OF EACH PAIR

TABLE 2: OPTIMAL T AND EFFICIENCY VALUES RELATIVE TO THE METHOD OF MOMENTS

M1 VALUES	M2 VALUES								
	1.0000	2.0000	3.0000	4.0000	5.0000	6.0000	7.0000	8.0000	9.0000
1.00	0.0000	0.0000	0.0000	0.0000	0.0000	0.0000	0.0000	0.0000	0.0000
	1.9213	2.6596	3.0891	3.2764	3.3218	3.3007	3.2560	3.2077	3.1633
2.00	0.1046	0.0000	0.0000	0.0000	0.0000	0.0000	0.0000	0.0000	0.0000
	1.6876	2.1005	2.3223	2.3991	2.3925	2.3495	2.2968	2.2463	2.2020
3.00	0.3721	0.3908	0.0000	0.0000	0.0000	0.0000	0.0000	0.0000	0.0000
	1.4579	1.5206	1.5256	1.5382	1.5168	1.4807	1.4421	1.4067	1.3763
4.00	0.5618	0.7157	0.8141	0.8680	0.8994	0.9195	0.9332	0.9431	0.9505
	1.3254	1.3149	1.2698	1.2362	1.2130	1.1964	1.1841	1.1746	1.1672
5.00	0.6718	0.8055	0.8733	0.9089	0.9300	0.9435	0.9528	0.9596	0.9648
	1.2495	1.2300	1.1970	1.1735	1.1572	1.1455	1.1368	1.1300	1.1247
6.00	0.7391	0.8509	0.9028	0.9298	0.9458	0.9561	0.9633	0.9685	0.9725
	1.2017	1.1819	1.1559	1.1377	1.1251	1.1160	1.1092	1.1039	1.0997
7.00	0.7838	0.8787	0.9209	0.9427	0.9557	0.9640	0.9699	0.9741	0.9774
	1.1691	1.1507	1.1292	1.1143	1.1040	1.0965	1.0909	1.0866	1.0832
8.00	0.8157	0.8977	0.9332	0.9515	0.9624	0.9695	0.9744	0.9780	0.9808
	1.1456	1.1286	1.1104	1.0978	1.0890	1.0827	1.0780	1.0743	1.0714
9.00	0.8392	0.9114	0.9421	0.9580	0.9674	0.9735	0.9778	0.9809	0.9833
	1.1278	1.1123	1.0964	1.0854	1.0779	1.0724	1.0683	1.0651	1.0625

FOR EACH ENTRY IN THE TABLE:

T* = TOP VALUE OF EACH PAIR

EFF = BOTTOM VALUE OF EACH PAIR

TABLE 3: NUMERICAL RESULTS

M1	M2	M1 (MM)	M2 (MM)	T* INIT	T* FINAL	M1*	M2*	NO. ITR.
1.000	1.000	0.909	0.946	.0000	.0000	0.864	0.995	2
1.000	2.000	1.406	1.465	.0000	.0000	1.275	1.616	2
1.000	3.000	1.101	2.398	.0000	.0000	1.054	2.506	2
1.000	4.000	1.382	2.749	.0000	.0000	1.116	3.405	2
1.000	5.000	1.282	3.745	.0000	.0000	1.092	4.394	2
1.000	6.000	1.264	4.335	.0000	.0000	1.086	5.047	2
1.000	7.000	1.178	5.246	.0000	.0000	1.082	5.710	2
1.000	8.000	1.155	6.825	.0000	.0000	1.080	7.299	2
1.000	9.000	1.458	5.502	.0000	.0000	1.079	7.430	2
2.000	1.000	1.454	1.430	.0000	.0000	1.390	1.496	2
2.000	2.000	2.288	1.617	.0818	.0000	1.464	2.527	3
2.000	3.000	1.459	3.660	.0000	.0000	1.465	3.644	2
2.000	4.000	1.433	5.529	.0000	.0000	1.433	5.528	2
2.000	5.000	1.425	7.146	.0000	.0000	1.428	7.128	2
2.000	6.000	1.681	6.938	.0000	.0000	1.428	8.168	2
2.000	7.000	1.342	9.571	.0000	.0000	1.427	8.996	2
2.000	8.000	1.295	11.488	.0000	.0000	1.427	10.426	2
2.000	9.000	1.459	12.148	.0000	.0000	1.427	12.417	2

TABLE 3: NUMERICAL RESULTS

M1	M2	M1 (MM)	M2 (MM)	T* INIT	T* FINAL	M1*	M2*	NO. ITR.
3.000	1.000	3.733	0.713	.4798	.4193	3.290	0.809	5
3.000	2.000	3.012	2.032	.3983	.0000	2.075	2.950	3
3.000	3.000	2.700	3.126	.0000	.0000	2.164	3.900	2
3.000	4.000	3.005	4.080	.0000	.0000	2.314	5.298	2
3.000	5.000	3.262	4.592	.0000	.0000	1.967	7.615	2
3.000	6.000	2.625	6.935	.0000	.0000	2.303	7.901	2
3.000	7.000	2.601	7.826	.0000	.0000	2.303	8.841	2
3.000	8.000	2.736	8.456	.0000	.0000	2.303	10.049	2
3.000	9.000	2.973	8.766	.0000	.0000	2.303	11.318	2
4.000	1.000	2.267	1.570	.0852	.4550	3.339	1.066	10
4.000	2.000	4.800	1.583	.7445	.7390	4.660	1.631	3
4.000	3.000	3.571	3.500	.8022	.8302	4.241	2.947	6
4.000	4.000	3.853	4.246	.8681	.8756	4.220	3.877	5
4.000	5.000	3.623	5.156	.8825	.9000	4.813	3.881	6
4.000	6.000	3.401	7.052	.9093	.9136	3.593	6.674	5
4.000	7.000	3.096	8.572	.0000	.0000	3.096	8.572	1*
4.000	8.000	3.315	9.659	.9353	.9408	3.721	8.606	5
4.000	9.000	3.235	10.900	.9411	.9472	3.713	9.496	6

* The sample contained no zero values and t* = 0, therefore the algorithm terminated with the Method of Moments estimators.

TABLE 3: NUMERICAL RESULTS

M1	M2	M1 (MM)	M2 (MM)	T* INIT	T* FINAL	M1*	M2*	NO. ITR.
5.000	1.000	4.842	1.070	.6701	.6457	4.434	1.168	4
5.000	2.000	3.519	3.041	.7561	.7333	3.340	3.203	3
5.000	3.000	4.148	3.906	.8729	.8579	3.582	4.522	5
5.000	4.000	4.605	4.816	.9170	.9144	4.289	5.171	4
5.000	5.000	4.132	6.462	.9304	.9250	3.639	7.336	5
5.000	6.000	3.696	8.430	.9385	-----	-----	-----	+
5.000	7.000	4.314	8.692	.9544	.9509	3.711	10.106	5
5.000	8.000	4.043	10.967	.9614	.9600	3.760	11.792	4
5.000	9.000	3.781	12.859	.9642	.9610	3.345	14.534	5
6.000	1.000	2.985	1.822	.3868	.5267	3.362	1.618	5
6.000	2.000	4.946	2.256	.8247	.8411	6.094	1.831	5
6.000	3.000	5.145	3.332	.8923	.8895	4.811	3.563	3
6.000	4.000	6.170	3.867	.9298	.9300	6.289	3.794	3
6.000	5.000	5.681	5.168	.9438	.9445	6.053	4.850	3
6.000	6.000	5.964	5.818	.9541	.9548	6.589	5.266	3
6.000	7.000	4.395	9.192	.9585	.9600	4.956	8.152	4
6.000	8.000	4.474	10.616	.9658	.9671	5.114	9.289	4
6.000	9.000	4.394	12.130	.9698	.9702	4.552	11.710	3

+ Cycling occurred between two pairs of estimates in this case. The algorithm was terminated after 20 iterations.

TABLE 3: NUMERICAL RESULTS

M1	M2	M1 (MM)	M2 (MM)	T* INIT	T* FINAL	M1*	M2*	NO. ITR.
7.000	1.000	3.378	1.865	.5656	.7047	4.778	1.319	9
7.000	2.000	5.115	2.542	.8532	.8557	5.325	2.441	3
7.000	3.000	5.015	3.952	.9081	.9101	5.384	3.681	4
7.000	4.000	5.690	4.738	.9380	.9390	6.197	4.350	4
7.000	5.000	5.329	6.260	.9509	.9514	5.565	5.995	3
7.000	6.000	4.825	8.332	.9595	.9613	5.910	6.802	4
7.000	7.000	5.403	8.710	.9672	.9677	5.847	8.049	4
7.000	8.000	5.688	9.205	.9712	.9714	5.851	8.949	3
7.000	9.000	5.634	10.234	.9742	.9744	5.938	9.710	3
8.000	1.000	14.014	0.614	.8663	.8772	16.441	0.523	4
8.000	2.000	14.120	1.215	.9169	.9157	13.405	1.280	3
8.000	3.000	6.623	3.950	.9376	.9367	6.105	4.285	3
8.000	4.000	7.741	4.214	.9524	.9523	7.588	4.299	3
8.000	5.000	7.947	5.426	.9655	.9655	8.049	5.357	2
8.000	6.000	7.851	6.437	.9712	.9713	8.507	5.941	3
8.000	7.000	10.058	5.856	.9761	.9761	10.048	5.862	2
8.000	8.000	9.811	6.831	.9793	.9793	9.581	6.995	3
8.000	9.000	8.343	9.347	.9825	.9824	8.056	9.680	3

TABLE 3: NUMERICAL RESULTS

M1	M2	M1 (MM)	M2 (MM)	T* INIT	T* FINAL	M1*	M2*	NO. ITR.
9.000	1.000	6.497	1.413	.8163	.8166	6.520	1.408	2
9.000	2.000	12.135	1.401	.9128	.9166	14.339	1.186	4
9.000	3.000	11.014	2.372	.9414	.9420	11.965	2.183	3
9.000	4.000	10.264	3.577	.9592	.9594	11.229	3.270	3
9.000	5.000	9.641	4.568	.9667	.9667	9.877	4.459	2
9.000	6.000	8.119	6.557	.9729	.9731	8.977	5.930	3
9.000	7.000	8.241	7.426	.9769	.9769	8.262	7.407	2
9.000	8.000	8.081	8.918	.9808	.9809	8.394	8.584	3
9.000	9.000	8.197	9.960	.9833	.9834	8.585	9.509	3

IX. CONCLUSIONS

The EPGF method provides estimators with asymptotic efficiency close to that of the Maximum Likelihood estimators over most of the parameter values considered. The smallest value found was 54% (at $m_1 = 3.0$ and $m_2 = 9.0$) and in most instances the asymptotic efficiency is greater than 97%. The EPGF method outperforms the Method of Moments in producing estimators of consistently higher asymptotic efficiency for all parameter values from .01 to 9.0.

The efficiency of the EPGF method relative to the Method of Moments is less than 110% when $m_2 < .3$ for most values of m_1. As may be seen from Table 3, the relative efficiency drops below this value again for large m_1 and m_2 beginning about $m_1 = 9.0$ and $m_2 = 3.0$, and extending to $m_1 = 6.0$ and $m_2 = 9.0$.

In almost all cases, $t^* = 0.$ when m_1 is less than 1.0. When this occurs the EPGF method reduces to estimation by the Method of Zero Frequency. The EPGF method becomes an extension of the Zero Frequency method when the efficiency of the estimators of the latter decreases. This happens when $t^* > 0.$ which is always the case for $m_1 > 3.0$.

Although the EPGF method is always better than the Method of Zero Frequency in terms of efficiency, it involves a greater computational effort when $t^* \neq 0$. As shown in [4],

the Method of Moments estimators have higher asymptotic efficiency than those of the Method of Zero Frequency whenever $m_1 > 3.5$ for all values of m_2. The efficiency of the Method of Moments estimators is over 20% higher than the Zero Frequency estimators when $m_1 > 4.5$. Combined with the above discussion of the EPGF method, whenever $t^* > 0$. the EPGF method will yield estimators of substantially higher asymptotic efficiency than those found by the Zero Frequency method. The choice of which method to use always rests with the user. However, if it is assumed that $m_2 > .3$ and that both m_1 and m_2 are not large (greater than about 7.0) then the extra effort required by the EPGF method is compensated for by a better than 10% increase in asymptotic efficiency of the estimators. When it is supposed that m_1 and m_2 are not to be found in the above region then estimation by the Method of Moments is recommended, as little increase in efficiency can be expected by using the EPGF method; i.e., going beyond STEP 1 of the algorithm presented in section V.B.

As noted in section VII, the EPGF method as applied by the algorithm of section V.B can fail to converge. This is characterized by cycling between two different pairs of estimators when the sample size is small. When this occurs the remedy is to use a larger sample. The variance of a population having the Neyman Type A as an underlying distribution grows large as m_1 and m_2 increase, especially when both are greater than 1.0. Assuming that the sample size is

large enough for the Central Limit theorem to provide a good approximation by a Normal distribution, the sample size required to provide a reasonable confidence interval containing the true mean is quite large. Since $\bar{x} = m_1 m_2$ is one of the estimating equations used in the EPGF method, it may be difficult to provide good initial estimates for the iterative procedure when n is small. It has been found by experience, as the sample size is increased, the EPGF estimates tend to cluster more tightly than the Method of Moments estimators about the true parameter values.

The EPGF method is not as easy to use as the Method of Moments, but with the aid of Table 2 and the use of the algorithm presented it can be applied readily with current programmable calculators. This is not always the case for estimation by Maximum Likelihood.

Although the EPGF method appears to be time consuming and tedious, it is far easier to implement than the Maximum Likelihood method. By using Table 1, reasonably good estimators can be obtained with less effort than required by the latter method.

APPENDIX A

COMPUTER PROGRAMS

Four computer programs were used in the compilation of this paper and are given on the following pages. All were programmed in the standard Fortran IV language and in double precision. Program 1 was used to compute the values of the information determinant $|\Lambda|$ of section III for m_1 and m_2 in the range of Table 1. Program 2 was run to compute the values of t* and EFF(t*) and produce Table 1. Table 2 was produced by slightly modifying program 2 to compute and table the efficiency ratio EFF/EFF_{mm} of section VI. Program 3 was used to perform the algorithm of section V.B and produce the estimates for the numerical examples of section VII, which are found in Table 3. Program 4 was used in simulating random numbers from the Neyman Type A distribution. The subroutine LPOIS1 found in program 4 is a local random number generator for Poisson distributed random deviates.

Programs 1, 2, and 3 are complete and may be used directly. Program 4 must be modified to be compatible with the user's local random number generation subroutines.

COMPUTER PROGRAM 1

```
C     COMPUTATION OF INFORMATION DETERMINANT GIVEN M1 AND M2
      IMPLICIT REAL*8(A-H,O-Z)
      REAL*8 M1,M2
      COMMON M1,M2,BETA,DET
      DIMENSION PARM(27),DETQ(27,27)
      DATA PARM/1.D-2,2.D-2,3.D-2,4.D-2,5.D-2,6.D-2,7.D-2,
     * 8.D-2,9.D-2,1.D-1,2.D-1,3.D-1,4.D-1,5.D-1,6.D-1,7.D-1,
     * 8.D-1,9.D-1,1.D0,2.D0,3.D0,4.D0,5.D0,6.D0,7.D0,8.D0,
     * 9.D0/
C     CREATE A TABLE OF DETERMINANT VALUES FOR VARYING
C     PARAMETERS OF
C     M1 AND M2
      J1 = 27
      J2 = 27
      DO 999 I = 27,27
      M1 = PARM(I)
      DO 99 J = J1,J2
      M2 = PARM(J)
      BETA = M1*DEXP(-M2)
C     VALUES HAVE BEEN SET FOR M1 AND M2
C
C     COMPUTE INFORMATION DETERMINANT
      CALL DETQS
      DETQ(I,J) = DET
99    CONTINUE
       IF (I.NE.1) GO TO 150
      WRITE (6,101) (PARM(L),L=J1,J2)
101   FORMAT(5X,3(3X,F12.10))
150   WRITE (6,151) M1,(DETQ(I,L),L=J1,J2)
151   FORMAT(F5.2,3(3X,F12.10))
999   CONTINUE
      STOP
      END
C
         SUBROUTINE DETQS
      IMPLICIT REAL*8(A-H,O-Z)
      REAL*8 M1,M2
      COMMON M1,M2,BETA,DET
C     COMPUTE Q GIVEN M1 AND M2
      H = 1.D-7
      PO = DEXP(BETA - M1)
      RX = BETA
      QX = BETA*RX
      Q = QX
      ELN = DLOG(BETA) + BETA
      DO 10 IX = 1,500
      X = DFLOAT(IX)
      ELNEXT = SERIES(X+1.D0)
```

```
      RNEXT = ESXP(ELNEXT - ELN)
      ELN = ELNEXT
      QX = QX*M2*(RNEXT/X)*(RNEXT/RX)
      RX = RNEXT
      IF(QX/Q .LT. H) GO TO 20
      K = IX
10    Q = Q + QX
20    Q = M2*M2*PO*Q
      A = M1*M2*M2*M2
      B = M1*M2*M2*(M1+M2+M1*M2)
      DET = (1.D0 + M2)*Q/A - B/A
      RETURN
      END
C
         FUNCTION SERIES(X)
      IMPLICIT REAL*8(A-H,O-Z)
      REAL*8 M1,M2
      COMMON M1,M2,BETA,DET
      SERIES = 0.D0
C     FIND INDEX OF THE MAX TERM: AIM
      AIM = 1.D0
      C1 = 1.D0
      C2 = 2.D0
      DO 10 K = 1,100
      FNUM = C2*AIM*DLOG(BETA/AIM) + C2*X - C1
      FDEN = C2*(X + AIM) - C1
      AINEXT = AIM*(C1 + FNUM/FDEN)
      IF(AINEXT .LE. 1.D-5) GO TO 11
      AIM = AINEXT
10    CONTINUE
11    IF(AIM .LE. 1.D0) AIM = 1.D0
      IF(AIM .GT. 1.D0) AIM = DFLOAT(IDINT(AIM + .5D0))
      IM = IDINT(AIM)
C     COMPUTE MAX TERM OF THE SERIES
      ALNIM = 0.D0
      DO 20 I = 1,IM
      AI = DFLOAT(I)
20    ALNIM = ALNIM + DLOG(AI)
      ALNIM = X*DLOG(AIM) + AIM*DLOG(BETA) - ALNIM
C     COMPUTE EACH TERM (K) OF SERIES AND SUM TO THE SERIES
      DO 40 K = 1,300
      AK = DFLOAT(K)
      ALNK = 0.D0
      DO 30 J = 1,K
      AJ = DFLOAT(J)
30    ALNK = ALNK + DLOG(AJ)
      ALNK = X*DLOG(AK) + AK*DLOG(BETA) - ALNK
      BK = ALNK - ALNIM
      IF(BK .GE. -161.1D0) SERIES = SERIES + DEXP(BK)
      IF(BK .LT. -161.1D0 .AND. K .GT. IM) GO TO 50
40    CONTINUE
C     COMPUTE THE NATURAL LOG OF THE XTH MOMENT.
50    SERIES = ALNIM + DLOG(SERIES)
      RETURN
      END
```

COMPUTER PROGRAM 2

```
C       COMPUTATION OF OPTIMAL T AND EFFICIENCY GIVEN M1 AND M2
        IMPLICIT REAL*8(A-H,O-Z)
        REAL*8 M1,M2
        COMMON M1,M2,DET,TSTAR,ESTAR
        DIMENSION PARM(27),TOPT(27,27),EOPT(27,27),DETQ(27,27)
C       CREATE A TABLE OF T-OPTIMAL VALUES FOR VARYING
C        PARAMETERS OF
C       M1 AND M2
C
C       READ IN M1 AND M2 AND CORRESPONDING INFORMATION
C        DETERMINANT VALUES FROM A DISK
C
        J2 = 0
        DO 99 K = 1,9
        J1 = J2 + 1
        J2 = J1 + 2
        DO 99 I = 1,27
        IF(I .NE. 1) GO TO 50
        READ (5,101)(PARM(J),J=J1,J2)
50      READ (5,101) (DETQ(I,J),J=J1,J2)
101     FORMAT(5X,3(3X,F12.10))
99      CONTINUE
C       SET M1 AND M2 VALUES FROM PARM
C       COMPUTE OPTIMAL T-STAR = TOPT AND OPTIMAL EFFICIENCY
C        E-STAR = EOPT
        DO 199 I = 1,27
        M1 = PARM(I)
        DO 199 J = 1,27
        M2 = PARM(J)
        DET = DETQ(I,J)
        CALL OPTIML
        TOPT(I,J) = TSTAR
        EOPT(I,J) = ESTAR
199     CONTINUE
C       PRINT OUT TABLE OF OPTIMAL T AND EFFICIENCY
        IU = 0
        DO 299 KI = 1,3
        IL = IU + 1
        IU = IL + 8
        JU = 0
        DO 298 KJ = 1,3
        JL = JU + 1
        JU = JL + 8
        WRITE (6,201)
        WRITE (6,202)
        WRITE (6,203)
        WRITE (6,204) (PARM(J),J=JL,JU)
        DO 297 I = IL,IU
        WRITE (6,205) PARM(I),(TOPT(I,J),J=JL,JU)
        WRITE (6,206) (EOPT(I,J),J=JL,JU)
297     CONTINUE
```

```
      WRITE (6,207)
      WRITE (6,208)
      WRITE (6,209)
298   CONTINUE
299   CONTINUE
201   FORMAT('1',//////)
202   FORMAT('0',33X,'TABLE 1:  OPTIMAL T AND EFFICIENCY
     * VALUES',//)
203   FORMAT('0',9X,'M1 VALUES',35X,'M2 VALUES')
204   FORMAT('0',19X,9(2X,F6.4))
205   FORMAT('0',11X,F4.2,4X,9(2X,F6.4))
206   FORMAT(' ',19X,9(2X,F6.4))
207   FORMAT('0',/,22X,'FOR EACH ENTRY IN THE TABLE:')
208   FORMAT('0',21X,'T* = TOP VALUE OF EACH PAIR')
209   FORMAT('0',21X,'EFF = BOTTOM VALUE OF EACH PAIR')
      STOP
      END
C
         SUBROUTINE OPTIML
      IMPLICIT REAL*8(A-H,O-Z)
      REAL*8 M1,M2
      COMMON M1,M2,DET,TSTAR,ESTAR
      FLAG = 0
      THETA = 9999.D-4
      E2 = 0.D0
C  FIND A COARSE BRACKET AROUND THETA:  (A,B).
5     THETA = THETA - 1.D-2
      IF(THETA .LT. 0.D0) GO TO 15
      ET = EFF(THETA)
      IF (ET .LT. E2) GO TO 15
      E2 = ET
      GO TO 5
15    A = THETA
      IF (A .LT. 0.D0) A = 0.D0
      B = THETA + 2.D-2
      IF(B .GT. 9999.D-4) B = 9999.D-4
C
   PERFORM A GOLDEN SECTION SEARCH FOR TSTAR TO MAX
C      EFF(TSTAR)
C  WITH STARTING INTERVAL (A,B).
      R = (-1.D0 + DSQRT(5.D0))/2.D0
20    A1 = (1.D0 - R)*(B - A) + A
      B1 = R*(B - A) + A
      EA1 = EFF(A1)
      EB1 = EFF(B1)
      IF(DABS(EA1 - EB1) .LT. 1.D-7) GO TO 30
      IF(EA1 .GT. EB1) B = B1
      IF(EA1 .LT. EB1) A = A1
      GO TO 20
30    TSTAR = (A1 + B1)/2.D0
      ESTAR = EB1
C     CHECK FOR A MAX FROM THE LEFT END
      IF(FLAG .EQ. 1) GO TO 40
```

```
      IF(TSTAR .LT. 1.D-1) RETURN
      T = TSTAR
      E = ESTAR
      THETA = 0.D0
      E2 = 0.D0
35    THETA = THETA + 1.D-2
      IF(THETA .GT. 99.D-2) RETURN
      ET = EFF(THETA)
      IF(ET .LT. E2) GO TO 36
      E2 = ET
      GO TO 35
36    A = THETA - 2.D-2
      IF(A .LT. 0.D0) A = 0.D0
      B = THETA
      FLAG = 1
      GO TO 20
40    IF(E .LT. ESTAR) RETURN
      TSTAR = T
      ESTAR = E
      RETURN
      END
C
         FUNCTION EFF(T)
      IMPLICIT REAL*8(A-H,O-Z)
      REAL*8 M1,M2
      COMMON M1,M2,DET,TSTAR,ESTAR
C     COMPUTE PROBABILITY GENERATING FUNCTION G(T)
      F = DEXP(M2*T - M2)
      G = DEXP(-M1*(1.D0 - F))
C     COMPUTE G(T**2)
      F2 = DEXP(M2*T*T - M2)
      G2 = DEXP(-M1*(1.D0 - F2))
C     COMPUTE NUMERATOR OF EFF(T)
      FN = 1.D0 + (M2*T - M2 - 1.D0)*F
      FN = M1*G*G*FN*FN
C     COMPUTE DENOMINATOR OF EFF(T)
      FD = 1.D0 + M2 + M1*M2*(T*F - 1.D0)*(T*F - 1.D0)
      FD = M2*((1.D0 + M2)*G2 - G*G*FD)
      FD = DET*FD
C     COMPUTE EFFICIENCY EFF(T)
      EFF = FN/FD
      RETURN
      END
```

COMPUTER PROGRAM 3

```
C     ESTIMATION OF M1 AND M2
C
      IMPLICIT REAL*8(A-H,O-Z)
      DIMENSION IX(450,10),M2(9)
      COMMON HATM1,HATM2
      READ (5,9) (M2(J),J=1,9)
9     FORMAT(3X,9I5)
C     READ IN MATRIX OF RANDOM NOS.:  IX
      READ (5,10) ((IX(I,J),J=1,10),I=1,450)
10    FORMAT(I3,9I5)
      NNN = 50
      ANN = DFLOAT(NNN)
      IFLAG = -1
      DO 90 I = 1,9
      IFLAG = IFLAG*(-1)
      IK = NNN*(I-1) + 1
      IKE = IK + NNN - 1
      PM1 = DFLOAT(IX(IK,1))
      IF(IFLAG .LT. 0) GO TO 15
      WRITE (6,100)
100   FORMAT('1',////,T37,'TABLE 3:  NUMERICAL RESULTS')
      WRITE (6,101)
101   FORMAT('0',/,T19,'M1',T27,'M2',T35,'M1',T43,'M2',T51,
     * 'T*',T58,'T*',T65,'M1*',T73,'M2*',T80,'NO.')
      WRITE (6,102)
102   FORMAT(' ',T34,'(MM)',T42,'(MM)',T50,'INIT',T56,'FINAL',
     * T80,'ITR.')
15    CONTINUE
      DO 90 J = 2,10
      JK = J - 1
      PM2 = DFLOAT(M2(JK))
      XBAR = 0.D0
      XSQ = 0.D0
      DO 20 K = IK,IKE
      XBAR = XBAR + DFLOAT(IX(K,J))
20    XSQ = XSQ + DFLOAT(IX(K,J)*IX(K,J))
      XBAR = XBAR/ANN
      XVAR = (XSQ - ANN*XBAR*XBAR)/(ANN - 1.D0)
      HATM2 = (XVAR - XBAR)/XBAR
      HATM1 = XBAR/HATM2
      AM1 = PM1
      AM2 = PM2
      BM1 = HATM1
      BM2 = HATM2
C     FIND ESTIMATORS USING EMPIRICAL PGF
      PAST = HATM2
      JJJ = 0
30    CALL TOPT (T)
      IF(JJJ .EQ. 0) TI = T
      JJJ = JJJ + 1
```

```
      IF(JJJ .GT. 20) GO TO 65
      TBAR = 0.D0
      DO 60 KK = IK,IKE
      IF(IX(KK,J) .EQ. 0) TBAR = TBAR + 1.D0
      IF(T .GT. 1.D-4 .AND. IX(KK,J) .NE. 0) TBAR = TBAR +
     * T**IX(KK,J)
60    CONTINUE
      IF(TBAR .LE. 1.D-4) GO TO 70
      TBAR = TBAR/ANN
      CALL ANEWT (TBAR,PAST,XBAR,T,PM2)
      HATM1 = XBAR/PM2
      IF(DABS(HATM2 - PM2) .LE. 1.D-4) GO TO 80
      HATM2 = PM2
      GO TO 30
65    WRITE (6,103) AM1,AM2,BM1,BM2,TI
103   FORMAT('0',T14,4F8.3,T49,F5.4,T56,'-----',T64,'-----',
     * T72,'-----',T81,'+')
      GO TO 90
70    WRITE (6,104) AM1,AM2,BM1,BM2,TI,T,BM1,BM2,JJJ
104   FORMAT('0',T14,4F8.3,T49,F5.4,T56,F5.4,2F8.3,I5,'*')
      GO TO 90
80    WRITE (6,105) AM1,AM2,BM1,BM2,TI,T,HATM1,PM2,JJJ
105   FORMAT('0',T14,4F8.3,T49,F5.4,T56,F5.4,2F8.3,I5)
90    CONTINUE
      WRITE (6,106)
106   FORMAT('1')
      STOP
      END
C
         SUBROUTINE ANEWT (TBAR,YIN,XBAR,T,YOUT)
C
      IMPLICIT REAL*8(A-H,O-Z)
      COMMON HATM1,HATM2
      TL = DLOG(TBAR)
      DO 20 KKK = 1,20
      GY = DEXP(YIN*(T-1.D0))
      FY = YIN*TL + XBAR*(1.D0 - GY)
      FPY = TL - XBAR*GY*(T - 1.D0)
      YOUT = YIN - FY/FPY
      IF(DABS(YOUT - YIN) .LE. 1.D-4) GO TO 99
      YIN = YOUT
20    CONTINUE
99    RETURN
      END
C
         SUBROUTINE TOPT (T)
C
      IMPLICIT REAL*8(A-H,O-Z)
      COMMON HATM1,HATM2
      FLAG = 0
      THETA = 9999.D-4
      E2 = 0.D0
C     FIND A COARSE BRACKET AROUND THETA:  (A,B)
```

```
5     THETA = THETA - 1.D-2
      IF(THETA .LT. 0.D0) GO TO 15
      ET = EFF(THETA)
      IF(ET .LT. E2) GO TO 15
      E2 = ET
      GO TO 5
15    A = THETA
      IF(A .LT. 0.D0) A = 0.D0
      B = THETA + 2.D-2
      IF(B .GT. 9999.D-4) B = 9999.D-4
      R = (-1.D0 + DSQRT(5.D0))/2.D0
20    A1 = (1.D0 - R)*(B - A) + A
      B1 = R*(B - A) + A
      EA1 = EFF(A1)
      EB1 = EFF(B1)
      IF(DABS(EA1-EB1) .LT. 1.D-15) GO TO 30
      IF(EA1 .GT. EB1) B = B1
      IF(EA1 .LT. EB1) A = A1
      GO TO 20
30    T = (A1 + B1)/2.D0
C     CHECK FOR MAX FROM THE LEFT END
      IF(FLAG .EQ. 1) GO TO 40
      IF(T .LT. 1.D-1) RETURN
      TSTAR = T
      ESTAR = EB1
      THETA = 0.D0
      E2 = 0.D0
35    THETA = THETA + 1.D-2
      IF(THETA .GT. 99.D-2) RETURN
      ET = EFF(THETA)
      IF(ET .LT. E2) GO TO 36
      E2 = ET
      GO TO 35
36    A = THETA - 2.D-2
      IF(A .LT. 0.D0) A = 0.D0
      B = THETA
      FLAG = 1
      GO TO 20
40    IF(ESTAR .LT.EB1) RETURN
      T = TSTAR
      RETURN
      END
C
         FUNCTION EFF(Q)
C
      IMPLICIT REAL*8(A-H,O-Z)
      COMMON HATM1,HATM2
      AM1 = HATM1
      AM2 = HATM2
      F = DEXP(AM2*Q - AM2)
      G = DEXP(-AM1*(1.D0 - F))
      F2 = DEXP(AM2*Q*Q - AM2)
      G2 = DEXP(-AM1*(1.D0 - F2))
```

```
FN = 1.D0 + (AM2*Q - AM2 - 1.D0)*F
FN = AM1*G*G*FN*FN
FD = 1.D0 + AM2 + AM1*AM2*(Q*F - 1.D0)*(Q*F - 1.D0)
FD = AM2*((1.D0 + AM2)*G2 - G*G*FD)
EFF = FN/FD
RETURN
END
```

COMPUTER PROGRAM 4

```
C       RANDOM NUMBER GENERATION FROM NEYMAN'S TYPE A
C        DISTRIBUTION
        DIMENSION AD(50)
        DATA ISEED1,ISEED2,ISORT,KSIZE/431219,187648,0,50/
        CALL OVFLOW
        DO 10 M1 = 1,9
        PM1 = FLOAT(M1)
        CALL LPOIS1(ISEED1,AD,KSIZE,PM1,ISORT)
        WRITE (6,1)
1       FORMAT('1',///////)
        WRITE (6,2)
2       FORMAT(' ',14X,'RANDOM NOS. FROM THE NEYMAN TYPE A
       * DISTRIBUTION')
        WRITE (6,3)
3       FORMAT('0',//,12X'M1 VALUE',T40,'M2 VALUES')
        CALL DGHTER(AD,ISEED2,M1,KSIZE)
10      CONTINUE
        STOP
        END
C
           SUBROUTINE DGHTER(AD,ISEED2,M1)
        DIMENSION AD(50),Y(100),IX(50,9)
        WRITE (6,99) (J,J=1,9)
99      FORMAT('0',18X,9I5,//)
        DO 200 K = 1,50
        ISIZE = INT(AD(K))
        IF(ISIZE .NE. 0) GO TO 53
        DO 50 M2 = 1,9
50      IX(K,M2) = 0
        GO TO 55
53      DO 100 M2 = 1,9
        PM2 = FLOAT(M2)
        CALL LPOIS1(ISEED2,Y,ISIZE,PM2,0)
        IX(K,M2) = 0
        DO 100 I = 1,ISIZE
100     IX(K,M2) = IX(K,M2) + INT(Y(I))
55      WRITE (6,101) M1,(IX(K,J),J=1,9)
101     FORMAT(' ',10X,I5,3X,9I5)
200     CONTINUE
        RETURN
        END
```

APPENDIX B

RANDOM NUMBERS FROM THE NEYMAN TYPE A DISTRIBUTION

Computer program 4 was used to generate the eighty-one sets of random numbers for the numerical examples of Table 3. The parameter range used was m_1 and m_2 from 1 to 9 in increments of 1 and the sample size was 50 in all cases. The following pages contain the data sets generated.

RANDOM NOS. FROM THE NEYMAN TYPE A DISTRIBUTION

M1 VALUE	M2 VALUES 1	2	3	4	5	6	7	8	9
1	1	3	5	5	6	4	9	9	10
1	0	1	3	9	4	11	5	11	9
1	0	3	2	4	4	6	7	5	4
1	1	2	0	6	9	8	8	6	9
1	0	0	0	0	0	0	0	0	0
1	0	0	0	0	0	0	0	0	0
1	0	4	1	1	4	6	9	9	6
1	0	0	0	0	0	0	0	0	0
1	0	6	3	4	6	4	6	12	11
1	0	0	0	0	0	0	0	0	0
1	0	3	0	3	2	8	6	9	6
1	0	0	0	0	0	0	0	0	0
1	0	0	0	0	0	0	0	0	0
1	0	0	0	0	0	0	0	0	0
1	2	2	4	4	7	3	10	9	9
1	2	1	1	7	8	10	17	9	18
1	0	0	0	0	0	0	0	0	0
1	1	3	2	5	4	8	4	10	12
1	0	0	0	0	0	0	0	0	0
1	3	0	4	6	7	4	10	11	9
1	3	4	4	6	6	14	15	17	14
1	1	3	4	5	1	6	3	6	8
1	3	2	7	9	7	8	6	17	17
1	1	1	5	1	6	12	11	31	15
1	0	0	0	0	0	0	0	0	0
1	0	1	2	7	3	7	1	5	9
1	0	0	0	0	0	0	0	0	0
1	0	0	0	0	0	0	0	0	0
1	1	6	7	5	11	12	17	15	12
1	1	3	5	5	8	2	3	9	12
1	1	1	3	5	7	5	8	9	12
1	0	0	0	0	0	0	0	0	0
1	1	5	3	5	9	8	7	8	7
1	0	2	1	1	5	3	5	10	10
1	2	4	1	3	5	8	7	9	8
1	0	1	8	12	18	12	10	18	18
1	3	9	11	12	15	14	12	16	22
1	4	2	3	3	3	5	12	8	12
1	0	0	0	0	0	0	0	0	0
1	0	6	10	15	15	24	17	35	29
1	1	2	7	4	10	8	12	17	22
1	0	0	0	0	0	0	0	0	0
1	4	6	8	8	8	16	24	15	16
1	0	0	0	0	0	0	0	0	0
1	0	0	0	0	0	0	0	0	0
1	0	1	1	3	2	7	8	11	12
1	5	7	5	10	14	13	18	16	14
1	0	4	1	6	7	8	6	6	8
1	0	3	4	6	7	5	1	5	8
1	2	2	7	5	12	5	15	11	13

RANDOM NOS. FROM THE NEYMAN TYPE A DISTRIBUTION

M1 VALUE	M2 VALUES								
	1	2	3	4	5	6	7	8	9
2	0	0	0	0	0	0	0	0	0
2	0	0	0	0	0	0	0	0	0
2	4	5	6	17	21	14	26	21	25
2	0	0	0	0	0	0	0	0	0
2	4	5	7	13	25	21	34	35	33
2	0	0	0	0	0	0	0	0	0
2	3	3	3	2	13	6	16	15	15
2	0	3	5	10	10	18	10	19	17
2	6	7	7	18	20	27	28	19	29
2	2	5	5	10	8	14	11	11	23
2	1	5	2	6	11	16	13	20	18
2	3	7	9	20	19	22	21	27	33
2	5	7	11	20	30	24	20	31	45
2	0	0	0	0	0	0	0	0	0
2	2	3	12	7	14	17	13	21	34
2	0	0	0	0	0	0	0	0	0
2	2	3	7	13	7	14	11	19	10
2	1	2	8	11	17	23	24	20	29
2	5	10	14	18	32	28	36	43	49
2	0	0	0	0	0	0	0	0	0
2	1	2	3	12	12	9	22	12	22
2	1	1	2	3	7	6	4	3	10
2	6	10	13	17	15	26	34	39	34
2	4	8	6	6	8	15	11	14	17
2	0	0	4	4	9	7	8	9	7
2	3	9	10	13	20	20	24	35	35
2	2	6	7	7	14	19	12	18	14
2	2	2	5	1	2	5	4	8	8
2	1	6	7	10	13	11	6	14	22
2	2	5	8	10	18	11	28	16	23
2	5	5	6	5	10	7	14	13	18
2	6	9	15	14	13	26	24	28	36
2	0	8	3	10	12	18	13	17	15
2	0	0	0	0	0	0	0	0	0
2	2	5	8	7	10	9	15	13	18
2	0	0	0	0	0	0	0	0	0
2	5	9	25	31	40	39	51	67	67
2	2	4	6	14	9	15	11	16	22
2	2	4	4	6	8	4	4	10	10
2	0	2	2	3	4	9	5	12	13
2	0	0	0	0	0	0	0	0	0
2	9	6	10	18	13	19	21	25	26
2	2	1	5	9	9	14	13	14	22
2	2	3	1	5	1	6	9	10	9
2	1	3	4	8	9	19	11	10	15
2	1	2	5	1	6	5	7	8	7
2	0	0	0	0	0	0	0	0	0
2	0	5	3	3	8	5	9	4	12
2	7	5	9	14	12	15	19	28	44
2	0	0	0	0	0	0	0	0	0

RANDOM NOS. FROM THE NEYMAN TYPE A DISTRIBUTION

M1 VALUE	M2 VALUES								
	1	2	3	4	5	6	7	8	9
3	4	6	14	19	22	37	29	30	31
3	4	14	13	21	24	40	30	44	49
3	4	10	10	10	19	21	20	10	25
3	4	3	5	9	11	10	9	20	16
3	6	7	17	29	25	43	44	58	63
3	1	5	5	9	8	12	14	16	22
3	1	2	7	19	17	12	24	24	28
3	3	7	7	5	14	9	12	15	15
3	3	14	11	20	22	36	48	54	64
3	0	0	4	7	0	4	7	7	9
3	3	7	10	10	22	20	34	36	40
3	0	0	0	0	0	0	0	0	0
3	1	6	2	5	5	5	6	10	9
3	8	14	25	19	32	42	49	54	41
3	7	9	17	18	31	33	38	40	46
3	3	5	7	14	15	11	21	24	26
3	3	7	13	18	24	25	28	34	35
3	3	7	8	7	11	16	15	30	27
3	1	6	8	16	16	19	17	29	23
3	8	12	20	16	23	26	33	26	26
3	4	4	12	15	23	31	32	22	40
3	2	9	15	11	16	19	23	22	21
3	2	6	11	14	15	15	31	16	30
3	1	3	2	4	4	5	1	10	8
3	3	7	8	14	15	19	16	25	24
3	1	5	8	20	23	33	30	32	33
3	2	0	5	3	0	6	8	8	10
3	0	1	1	5	6	10	8	8	10
3	6	7	11	18	18	25	31	23	38
3	0	1	3	1	6	9	9	8	7
3	2	4	7	10	7	13	16	18	22
3	2	2	0	2	5	8	4	6	14
3	3	4	6	14	12	7	15	16	22
3	3	7	6	12	16	22	18	20	28
3	2	8	4	16	18	13	19	25	26
3	2	7	14	10	20	21	25	27	25
3	4	15	12	12	21	30	32	42	46
3	0	0	0	0	0	0	0	0	0
3	0	0	0	0	0	0	0	0	0
3	2	1	9	8	9	8	7	10	16
3	0	0	0	0	0	0	0	0	0
3	3	7	6	11	25	19	14	26	20
3	4	13	9	14	18	19	26	36	41
3	5	11	11	20	16	27	26	29	44
3	2	12	23	27	25	27	43	37	40
3	7	13	13	32	30	38	39	50	49
3	0	5	6	8	12	18	14	16	18
3	0	0	0	0	0	0	0	0	0
3	3	7	6	16	23	27	27	27	35
3	1	6	11	25	25	20	26	31	41

RANDOM NOS. FROM THE NEYMAN TYPE A DISTRIBUTION

M1 VALUE	M2 VALUES								
	1	2	3	4	5	6	7	8	9
4	2	8	16	29	17	24	31	29	44
4	3	8	15	22	23	20	17	28	38
4	7	12	23	30	30	40	37	49	39
4	1	8	7	7	10	13	15	15	15
4	4	8	10	26	23	28	26	32	39
4	3	10	17	17	34	33	25	51	76
4	3	7	19	15	32	40	32	45	60
4	8	17	26	35	30	41	73	63	73
4	1	5	8	10	14	19	19	20	26
4	0	13	5	11	16	23	22	20	33
4	2	2	6	4	3	6	7	10	12
4	9	10	14	17	24	31	22	26	44
4	7	10	14	26	18	26	31	44	49
4	3	5	6	14	11	18	16	21	22
4	13	9	26	22	20	42	47	69	58
4	7	6	12	21	19	33	44	41	49
4	5	15	21	29	27	30	50	58	52
4	4	4	10	3	10	8	12	14	19
4	3	9	6	10	10	15	11	25	26
4	2	9	12	14	21	29	39	30	35
4	5	20	20	36	48	54	66	69	83
4	1	9	7	13	11	28	27	16	22
4	1	2	1	5	7	2	3	9	9
4	5	1	12	12	18	11	16	14	15
4	8	10	31	36	52	44	56	76	65
4	2	4	5	5	11	7	10	19	16
4	2	1	7	7	12	14	12	10	17
4	5	9	13	20	13	25	33	43	37
4	2	6	13	17	13	23	27	37	30
4	2	6	9	13	10	11	13	19	17
4	2	7	13	14	16	31	21	31	41
4	3	1	7	11	14	10	24	23	25
4	2	4	12	12	12	17	19	28	25
4	3	8	20	18	20	41	29	41	30
4	2	6	5	6	10	12	10	14	18
4	2	3	6	6	9	11	17	13	15
4	0	5	14	8	10	10	18	21	10
4	2	7	6	10	15	22	11	27	27
4	1	14	20	21	28	55	52	61	55
4	1	2	6	12	14	10	22	7	19
4	2	7	7	11	12	12	20	27	26
4	3	15	16	33	32	38	52	41	54
4	0	7	6	7	10	18	20	17	14
4	0	1	1	3	6	7	6	3	10
4	3	4	8	10	10	6	8	27	10
4	6	12	22	25	38	37	37	48	59
4	9	12	17	18	29	39	28	47	59
4	12	14	34	30	36	53	44	69	86
4	5	6	10	24	17	21	36	34	39
4	0	2	4	13	9	11	14	20	21

RANDOM NOS. FROM THE NEYMAN TYPE A DISTRIBUTION

M1 VALUE	M2 VALUES								
	1	2	3	4	5	6	7	8	9
5	4	17	20	22	36	37	39	46	70
5	6	14	15	29	39	36	51	55	50
5	9	18	15	26	51	34	41	63	72
5	11	14	27	34	43	46	49	50	60
5	6	11	29	39	30	37	36	41	66
5	11	10	23	23	29	28	37	46	56
5	4	6	7	13	11	10	21	25	28
5	0	0	0	0	0	0	0	0	0
5	7	8	22	20	33	34	46	53	47
5	9	24	23	33	40	63	53	73	80
5	2	9	12	15	12	19	24	25	27
5	8	10	16	35	29	35	49	58	60
5	3	3	2	4	9	7	5	8	9
5	3	6	5	9	4	8	15	14	16
5	0	3	2	7	10	0	5	6	7
5	3	13	15	22	27	28	36	32	47
5	3	12	13	27	29	39	44	62	64
5	3	8	13	17	23	40	29	40	44
5	10	23	33	50	61	49	69	73	97
5	2	0	2	8	6	2	12	17	10
5	6	5	16	17	21	34	42	39	34
5	5	10	16	18	25	31	32	41	35
5	5	10	12	16	29	27	42	47	51
5	7	10	16	17	32	48	43	47	67
5	2	5	13	14	18	17	23	26	25
5	2	7	20	22	29	25	41	32	47
5	7	16	30	25	42	60	48	78	73
5	2	5	11	17	22	29	26	36	41
5	5	14	18	34	24	38	52	67	53
5	8	12	29	37	51	52	58	79	83
5	1	8	4	10	14	5	16	19	17
5	4	28	24	26	45	44	62	75	95
5	4	13	17	23	34	43	56	48	69
5	4	13	16	20	29	24	37	43	47
5	6	4	12	22	17	17	25	29	30
5	14	19	31	33	26	41	49	63	84
5	5	14	16	22	22	32	35	45	46
5	7	6	19	33	39	54	59	66	66
5	5	11	13	28	26	36	50	50	57
5	12	20	34	34	39	58	59	74	77
5	4	5	15	21	20	27	24	35	30
5	0	3	3	4	6	3	5	7	11
5	4	16	13	19	30	26	37	37	41
5	8	20	24	25	29	51	51	65	74
5	4	2	4	4	3	15	12	17	15
5	8	20	29	48	50	58	87	88	82
5	1	4	11	10	6	6	9	18	10
5	1	8	8	11	13	18	17	24	22
5	5	1	12	24	27	32	49	35	43
5	9	17	30	42	45	55	63	100	96

RANDOM NOS. FROM THE NEYMAN TYPE A DISTRIBUTION

M1 VALUE	M2 VALUES 1	2	3	4	5	6	7	8	9
6	5	17	16	24	46	29	41	55	55
6	2	5	7	5	7	15	17	13	14
6	5	5	13	15	22	22	19	30	17
6	6	12	19	23	25	46	47	67	66
6	3	6	16	10	18	28	26	39	41
6	6	10	6	19	32	21	37	39	51
6	7	16	11	24	33	30	36	50	54
6	2	5	15	15	30	21	30	34	27
6	4	18	20	29	40	42	66	68	73
6	5	9	8	17	17	20	21	21	31
6	0	3	2	12	9	14	12	22	17
6	4	9	24	29	40	52	47	58	64
6	4	9	13	12	20	21	25	25	33
6	7	11	24	36	33	52	43	66	61
6	3	11	16	22	33	28	37	30	49
6	2	13	16	20	26	36	31	45	57
6	2	9	3	8	16	26	25	28	27
6	5	13	11	21	20	29	36	40	49
6	10	24	32	39	49	49	72	67	76
6	13	22	29	37	54	56	79	78	102
6	4	11	22	24	18	30	33	39	41
6	2	17	15	21	33	33	33	46	36
6	4	6	14	18	19	23	30	30	32
6	1	14	19	27	25	39	49	41	57
6	3	5	15	25	20	32	28	36	46
6	7	7	9	20	39	29	32	46	76
6	7	10	11	21	33	28	34	46	44
6	7	10	18	26	37	31	45	43	65
6	5	11	23	30	34	46	53	52	61
6	16	15	34	44	48	62	78	107	97
6	1	10	20	21	30	39	39	48	43
6	10	9	30	35	39	54	65	82	66
6	0	7	6	19	20	21	17	23	24
6	15	14	31	46	63	59	75	90	108
6	7	9	25	42	35	60	59	50	87
6	8	18	15	29	27	26	39	45	63
6	11	20	34	50	47	74	79	82	103
6	1	5	11	11	10	15	23	30	21
6	9	31	29	35	61	69	93	108	91
6	2	7	9	14	16	24	29	29	33
6	3	7	21	29	24	30	26	35	55
6	7	12	21	24	31	43	49	50	71
6	3	8	9	19	22	27	25	29	33
6	0	1	2	5	8	8	5	12	8
6	7	8	17	18	25	32	28	43	31
6	15	24	30	41	53	56	77	96	106
6	1	3	5	9	13	13	13	14	22
6	8	6	16	13	16	26	29	23	29
6	7	14	28	28	27	32	37	48	54
6	6	12	17	32	25	37	51	77	98

RANDOM NOS. FROM THE NEYMAN TYPE A DISTRIBUTION

M1 VALUE	M2 VALUES 1	2	3	4	5	6	7	8	9
7	4	5	11	18	17	31	27	26	34
7	3	15	12	19	21	24	31	43	40
7	1	4	5	13	11	17	18	12	23
7	2	4	8	11	12	15	18	17	16
7	4	5	18	20	30	30	33	30	37
7	7	18	11	27	24	37	34	46	61
7	1	7	8	9	18	23	18	21	25
7	3	6	7	12	10	18	17	30	23
7	16	26	27	34	53	68	85	84	100
7	2	8	6	10	14	20	16	27	23
7	17	25	41	51	69	75	92	111	109
7	4	16	10	19	30	41	33	49	49
7	2	3	13	23	23	23	31	39	39
7	18	21	45	61	75	112	89	92	121
7	8	11	14	27	30	32	28	48	66
7	4	11	22	17	35	31	38	48	54
7	15	17	26	42	50	55	76	74	91
7	14	15	23	40	42	55	64	76	74
7	5	9	21	28	32	30	53	45	53
7	4	18	24	33	42	46	55	62	64
7	5	13	29	31	35	48	70	65	41
7	4	6	19	14	21	24	26	28	36
7	7	9	10	26	36	36	43	49	52
7	6	6	14	22	23	37	43	45	57
7	8	18	33	51	45	48	57	71	87
7	2	6	8	12	8	16	24	18	31
7	4	11	27	29	40	51	54	73	50
7	5	6	13	20	20	20	31	35	39
7	6	13	20	24	39	32	46	52	70
7	10	24	19	38	54	65	66	84	83
7	10	27	40	44	60	58	84	87	94
7	10	10	28	39	37	44	50	59	81
7	7	13	30	39	49	57	59	57	77
7	1	12	8	22	20	27	31	29	29
7	8	14	17	22	21	31	43	56	49
7	3	14	15	19	38	30	45	42	55
7	6	12	23	28	43	47	49	57	77
7	6	18	28	30	36	40	52	48	69
7	5	22	31	46	45	58	75	77	89
7	2	9	7	16	17	30	29	28	34
7	6	7	15	14	25	19	36	34	42
7	5	2	27	26	29	25	40	40	37
7	4	8	17	15	12	22	38	28	39
7	11	15	27	34	49	50	53	77	78
7	10	24	24	37	42	58	63	76	81
7	6	19	18	16	26	42	48	67	48
7	4	12	17	26	32	45	40	47	40
7	2	12	12	10	25	27	26	37	38
7	6	16	24	41	45	57	88	76	80
7	12	28	39	43	58	83	88	96	98

RANDOM NOS. FROM THE NEYMAN TYPE A DISTRIBUTION

M1 VALUE	M2 VALUES 1	2	3	4	5	6	7	8	9
8	18	20	32	42	46	57	65	88	99
8	5	10	7	18	19	30	36	31	33
8	17	30	52	72	77	87	102	112	136
8	6	20	24	26	33	42	46	53	82
8	6	17	39	26	41	54	76	76	80
8	9	20	34	40	53	54	65	74	92
8	5	13	20	21	34	28	34	53	48
8	5	20	25	37	44	48	67	75	89
8	17	18	35	37	59	71	77	68	98
8	10	8	39	36	54	52	68	69	71
8	7	21	28	25	45	35	50	65	70
8	16	28	47	46	69	77	97	117	125
8	6	18	21	38	32	43	51	57	59
8	9	11	25	33	37	51	62	70	86
8	2	17	26	22	40	46	46	67	81
8	7	12	25	25	38	52	52	55	61
8	8	21	41	41	41	61	74	95	96
8	10	12	24	36	47	65	62	91	107
8	2	4	7	7	19	18	25	31	20
8	8	14	9	24	32	34	52	48	50
8	4	17	16	28	28	24	31	26	56
8	12	18	26	30	58	74	66	87	81
8	8	20	23	35	42	44	43	75	82
8	9	21	35	48	75	61	87	99	100
8	13	25	46	56	85	112	101	89	144
8	9	12	21	27	28	36	35	51	58
8	7	8	16	22	34	32	41	42	51
8	8	21	30	41	56	56	78	92	95
8	6	8	8	10	25	28	37	36	32
8	12	18	32	38	49	60	62	57	86
8	7	18	26	36	47	65	63	78	81
8	3	10	4	9	11	26	38	34	30
8	9	16	29	44	48	55	65	81	102
8	11	29	45	51	63	67	89	116	103
8	7	25	26	47	57	41	66	62	100
8	7	20	24	28	31	44	45	66	63
8	7	9	13	33	30	34	49	58	67
8	10	22	22	32	44	54	58	66	72
8	13	23	30	45	35	59	61	75	93
8	7	30	38	47	51	49	63	72	92
8	5	9	9	18	11	19	15	17	31
8	8	11	14	24	28	35	48	53	53
8	5	10	11	9	25	37	29	40	35
8	13	16	25	27	50	48	67	70	78
8	9	14	22	21	25	52	50	52	57
8	10	18	29	35	58	60	82	74	103
8	15	23	39	52	67	93	73	82	130
8	7	22	41	42	65	80	94	97	103
8	9	18	27	22	40	54	61	65	88
8	7	13	21	22	30	23	41	44	50

RANDOM NOS. FROM THE NEYMAN TYPE A DISTRIBUTION

M1 VALUE	M2 VALUES								
	1	2	3	4	5	6	7	8	9
9	11	12	13	17	28	29	24	31	53
9	11	21	24	33	40	47	48	74	92
9	6	20	22	31	37	50	46	63	63
9	8	12	19	20	28	30	39	59	61
9	20	35	52	70	75	104	98	137	156
9	20	23	34	62	78	82	88	98	110
9	6	21	25	32	50	53	63	63	63
9	8	14	29	35	47	41	60	67	67
9	4	9	14	22	24	34	27	37	48
9	12	17	36	45	61	83	74	89	87
9	9	20	30	57	67	51	75	104	123
9	13	19	23	31	32	46	55	61	71
9	12	18	39	51	66	80	83	102	109
9	8	18	23	37	38	39	60	76	73
9	15	20	38	42	41	64	57	90	81
9	3	10	23	32	35	40	49	58	73
9	3	11	15	33	19	24	37	32	47
9	3	13	12	24	37	45	45	57	58
9	5	21	26	42	48	58	80	70	104
9	13	10	22	27	33	55	65	57	73
9	15	13	24	46	54	62	72	88	94
9	10	10	15	24	29	48	58	55	76
9	8	21	28	50	59	76	108	104	120
9	12	23	29	43	55	98	90	112	121
9	15	22	32	46	57	80	88	88	105
9	5	14	12	23	42	34	43	47	50
9	9	20	38	39	50	58	89	89	102
9	10	17	23	41	39	57	69	64	82
9	2	9	15	22	23	28	31	41	34
9	15	35	46	66	77	99	108	120	138
9	5	10	14	21	15	32	25	35	40
9	13	31	32	60	68	81	95	114	121
9	13	19	24	30	44	46	54	65	48
9	12	16	29	42	48	53	65	73	90
9	4	14	20	26	33	40	49	54	86
9	7	21	33	39	50	58	67	97	96
9	7	14	29	32	47	55	67	68	65
9	9	19	25	29	40	62	67	94	87
9	10	18	48	49	65	67	83	113	121
9	11	16	30	22	30	42	41	50	48
9	18	18	35	47	50	51	72	98	109
9	3	11	14	18	21	25	26	30	39
9	17	28	36	53	61	73	98	112	144
9	9	12	21	39	47	38	62	59	84
9	7	8	13	29	25	26	29	37	43
9	5	18	23	23	34	48	43	44	61
9	8	12	29	38	48	38	54	52	70
9	4	7	23	22	23	29	32	50	38
9	2	10	22	35	45	43	35	53	67
9	4	20	25	39	39	60	67	72	91

LIST OF REFERENCES

1. Neyman, J., "On a New Class of 'Contagious' Distributions, Applicable in Entomology and Bacteriology," Annals of Mathematical Statistics, 10, p. 35-57, 1939.

2. Wilks, S. S., Collected Papers, Contributions to Mathematical Statistics, p. 49-51, John Wiley & Sons, 1967.

3. Shenton, L. R., "On the Efficiency of the Method of Moments and Neyman's Type A Distribution," Biometrika, 36, p. 450-454, 1949.

4. Johnson, N. and Kotz, S., Discrete Distributions, p. 216-226, Houghton Mifflin Company, 1969.

5. Read, R. R., "Asymptotic Efficiency and Some Quasi-Method of Moments Estimators," USNPS Technical Report NPS55-77-7, Monterey, California, 1977.

6. Douglas, J. B., "Fitting the Neyman Type A (two parameter) Contagious Distribution," Biometrics, 11, p. 149-173, 1955.

7. Caglayan, R., "Efficient Estimation of Negative Binomial Parameters Using Empirical LaPlace Transform," Unpublished M. S. Thesis, U. S. Naval Postgraduate School, 1978.

8. Abramowitz, M. and Stegun, I. A., "Handbook of Mathematical Function," Ninth Edition, p. xiii, Dover Publications, Inc., 1972.

9. Katti, S. K. and Gurland, J., "Efficiency of Certain Methods of Estimation for the Negative Binomial and the Neyman Type A Distributions," Biometrika, 49, p. 215-226, 1962.

INITIAL DISTRIBUTION LIST

		No. Copies
1.	Defense Documentation Center Cameron Station Alexandria, Virginia 22314	2
2.	Library, Code 0142 Naval Postgraduate School Monterey, California 93940	2
3.	Department Chairman, Code 55 Department of Operations Research Naval Postgraduate School Monterey, California 93940	1
4.	Professor Robert R. Read, Code 55Re Department of Operations Research Naval Postgraduate School Monterey, California 93940	1
5.	Professor Toke Jayachandran, Code 53Jy Department of Mathematics Naval Postgraduate School Monterey, California 93940	1
6.	Commander in Chief Pacific Research and Analysis Office J77, Box 13 Camp H. M. Smith, Hawaii 96861	1
7.	Professor James B. Douglas Department of Statistics University of New South Wales P. O. Box 1 Kensington, NSW Australia	1
8.	Professor Jerzy Neyman Director, Statistical Laboratory University of California Berkeley, California 94720	1
9.	Professor Paul R. Milch, Code 55Mh Department of Operations Research Naval Postgraduate School Monterey, California 93940	1

		No. Copies
10.	Leonard R. Shenton 210 Pine Valley Drive Athens, Georgia 30601	1
11.	Harold R. Bishop 1480 Shaffer Drive San Jose, California 95132	1

5 JUN 81 27665

Thesis
B54517 Bishop 184270
c.1 The use of the empirical probability generating function to estimate the Neyman type A distribution parameters.

5 JUN 81 27665

Thesis
B54517 Bishop 184270
c.1 The use of the empirical probability generating function to estimate the Neyman type A distribution parameters.

thesB54517
The use of the empirical probability gen
3 2768 001 03658 5
DUDLEY KNOX LIBRARY